436210
OKP

SCIENTIFIC AND PRODUCING COMPANY
«DOZA»

RADIOMETRIC MONITORING INSTALLATIONS
RZB-05D

Operation manual
FVKM.412125.001RE

Table of contents

1 Introduction …….. 3
2 Assignment ……... 3
3 Technical data …….. 3
4 Complete set ……. 7
5 Design and principle of operation …… 8
6 Labelling and sealing …… 18
7 Tare and packaging …….. 18
8 Safety measures …… 18
9 Sequence of mounting …….…… 18
10 Preparation of the monitoring installation for operation …….. 19
11 Operation procedure ……. 20
12 Calibration techniques ……..…. 21
13 Determination of basic measurement error value of β-radiation flux density …… 22
14 Determination of basic error value and measurement range of α-radiation flux density ……. 23
15 Setup of the monitoring installation ……. 23
16 Possible faults and ways of their removal …… 28
17 Maintenance ……. 29
18 Storage rules ……. 29
19 Transportation ……... 29

Appendix A Determination technique of factor ξ for the detecting unit …….. 31
Appendix B Typical dependance of senitivity of the monitoring installation on maximum energy of β-radiation spectrum ……... 32
Appendix C Assembly unstructions ……. 33

1 INTRODUCTION

This operation manual is intended for learning the design and principle of operation of the radiometric monitoring installations RZB-05D, and also other information necessary for full usage of technical features of the installation and its proper operation.

2 ASSIGNMENT

Radiometric monitoring installations RZB-05D (hereafter as monitoring installation) are intended for contamination level measurement of a surface of arms, legs (footwear) and staff overalls by β- and α-active matters and for signalling on exceeding the specified permissible flux density values (henceforth as thresholds).

The monitoring installation is available in the following versions:
RZB-05D-01 FVKM.412125.001-01 - radiometric monitoring installation floor version with an external unit for detecting contamination by α-active matters;
RZB-05D-02 FVKM.412125.001-02 - radiometric monitoring installation floor version without an external unit for detecting contamination by α-active matters;
RZB-05D-03 FVKM.412125.001-03 - radiometric monitoring installation desk version with an external unit for detecting contamination by α-active matters;
RZB-05D-04 FVKM.412125.001-04 - radiometric monitoring installation desk version without an external unit for detecting contamination by α-active matters.

The monitoring installation is a measuring instrument.
Application range of the monitoring installation covers nuclear power stations, thermoelectric power stations, nuclear stations of heat supply, and also sanitary pass, sanitary locks, lab of enterprises and institutions applying radioactive matters.
The designation of the monitoring installation when ordering is shown in Table 1.

Table 1.

Conventional designation	Example of the record for ordering
RZB-05D	Radiometric monitoring installations RZB-05D

3 TECHNICAL DATA

3.1 Basic technical data and characteristics of the monitoring installation are summarized in Table 2.

Table 2.

Parameter	β-radiation	α-radiation
Detector type	Beta-2	BDZA-96
Measurement range of a flux density, min^{-1} cm^{-2} (on β-radiation - P_β, on α-radiation - P_α)	10…9999	1…9999
Range of the alarm response threshold settings, min^{-1} cm^{-2}	10…9900	1…9900
Discreteness of the threshold settings within the entire range of measurement, min^{-1} cm^{-2}	1	1
Basic relative error limits of measurement of β- and α-radiation flux density, %	$\pm(20+200/P_\beta)$ *	$\pm(20+20/P_\alpha)$ *
Range of mean (boundary) energies of the registered β-radiation spectrum, MeV	0,96…1,5 (0,3…3,5)	
Energy relationship differs from the typical one (See Appendix B) for no more than, %	±10	
Registration efficiency of β- radiation on nuclides 90Sr-90Y, %	40…60	
Registration efficiency of α- radiation on nuclides Pu-239, % U-234, % U-238, %		 30…50 20…30 10…20
Maximum permissible irradiation, mZv	180	180
Intrinsic background level, $min^{-1}cm^{-2}$	5…15	1
Permissible value of equivalent dose rate of a gamma-radiation background (radiation stability), μZv/h	0,1 -10	0,1 -10
* - P_β - measured value of β-radiation flux density ($min^{-1}cm^{-2}$), P_α - measured value of α-radiation flux density ($min^{-1}cm^{-2}$).		

The monitoring installation allows performing calibration and operation for Sr90-Y90 and any **nine** nuclides, which have a mean energy of β-radiation spectrum from the indicated range or nuclides, which have only γ- radiation from the indicated range. With this, the registration efficiency for each nuclide is stored in a nonvolatile memory of the detecting units or central processing unit.

3.2 The monitoring installation provides audio and light signalling of threshold excess of contamination of arms, legs (footwear) or overalls by α-, β- and γ-active matters.

The red light indicator "dirty" is on when a contamination exceeds the specified threshold value, the green light indicator "clean" is on when a contamination is lower than the specified threshold value.

3.3 The time of one exposition makes on the average 4 seconds, and at contamination of object close to the threshold value - no more than 32 seconds. The time between expositions is no less than 5 seconds.

3.4 The monitoring installation provides a smooth setting of signalling thresholds with a step in 1 $min^{-1}cm^{-2}$ in all the measurement range.

3.5 Settling time of an operating mode of the monitoring installation is no more than 5 minutes.

3.6 Time of continuous operation of the installation is no less than 24 hours.

3.7 The limits of permissible complementary error of measurements is as follows:

- ±10 % from the readings under normal conditions at a temperature variation in operating temperature range of from minus 10 to +50 °C;
- ±10 % from the readings of the monitoring installation under normal conditions at change of relative humidity of air up to 95 % at temperature 35 °C;
- ±10 % from the readings of the monitoring installation under normal conditions when operating in a constant magnetic field with strength no more than 400A/m.

3.8 The instability of the monitoring installation readings for 8 hours of continuous operation does not exceed ±10 % from average value of the readings for this period.

3.9 The monitoring installation provides automatic compensation of an external γ-background and intrinsic background of detectors.

3.10 Power supply of the monitoring installation is provided from a single-phase AC mains with a frequency of 50 Hz ±1 Hz, harmonic content of up to 5 % and rated voltage 220 V with a permissible deviation from from minus 15 % up to +10 %.

3.11 Power consumption of the monitoring installation is no more than 20 VA at rated supply voltage.

3.12 The insulation between a body of the monitoring installation and contacts of an AC cable plug withstands a testing DC voltage of 1500V within 1 minute without a breakdown. Resistance of the above circuits is no less than 20 MΩ under normal conditions.

3.13 Mean time between failures is no less than 3000 hours.

3.14 Mean lifetime is no less than 6 years.

3.15 The design of the installation is spray-proof (degree of protection is IP32C according to the State Standard (GOST) 14254-96) 3.16.

3.16 The dimensions and weight of the monitoring installation are given in Table. 3.

Table 3.

Design version	Dimensions, mm, no more	Weight, kg, no more
RZB-05D-01, RZB-05D-02	740×750×1180	45,0
RZB-05D-03, RZB-05D-04 (control panel)	740×400×190	12,0

3.17 Type of climatic fulfillment of the monitoring installation S3 according to GOST P 52931-2008.

The monitoring installation works steadily at environmental temperature variation from minus 10°C up to +50°C and under conditions of relative humidity of an environment up to 95 % at temperature +35°C.

3.18 The appearance of the monitoring installation depending on the model is shown in figure 1, figure 2, figure 3 and figure 4.

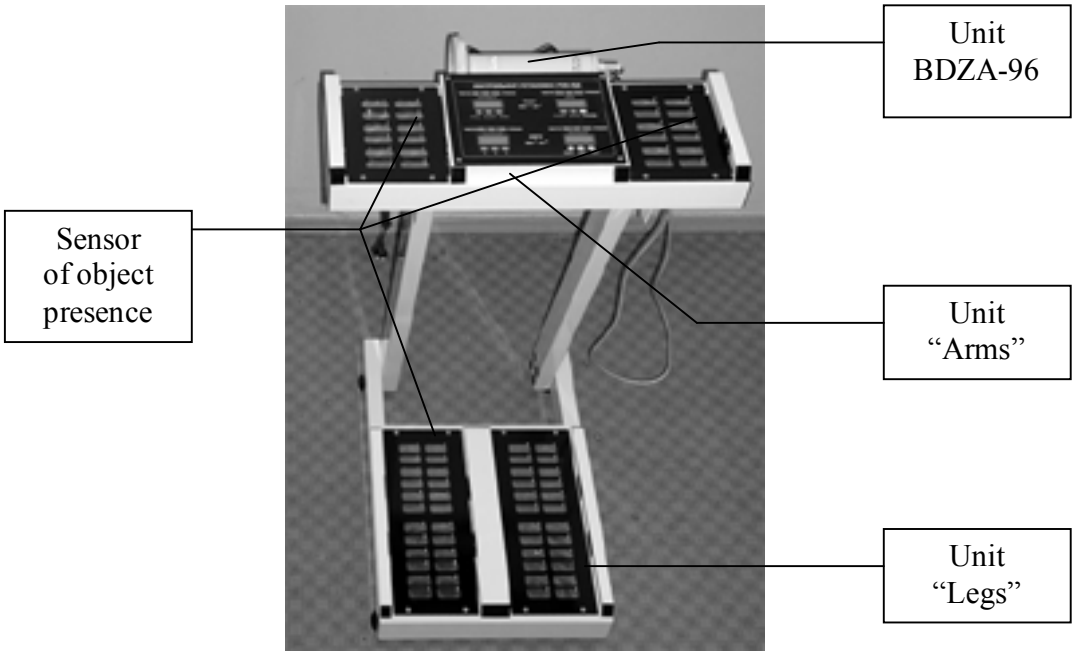

Figure 1 - The radiometric monitoring installations RZB-05D-01. Appearance

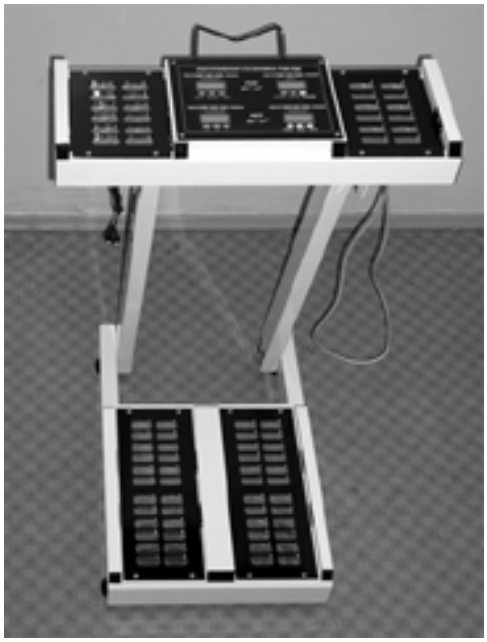

Figure 2 - The radiometric monitoring installations RZB-05D-02. Appearance

Figure 3 - The radiometric monitoring installations RZB-05D-03. Appearance

Figure 4 - The radiometric monitoring installations RZB-05D-04. Appearance

4 COMPLETE SET

4.1 The delivery set of the monitoring installation is listed in Table 4.

Table 4.

Component parts		Quantity in RZB-05D-XX			
Designation	Name	01	02	03	04
GKPS.400100.000	Unit "Arms"	1	1	1	1
GKPS.400200.000	Unit "Legs"	1	1	-	-
GKPS.400400.000	Rack	2	2	2	2
GKPS.400500.000	Basis	-	-	1	1
TE2.328.001	Detecting block BDZA-96	1	-	1	-

4.2 The STF set of the device may include, on the Customer’s request, the following items: an additional detecting unit, additional sensors of object presence, etc.

5 DESIGN AND PRINCIPLE OF OPERATION

5.1 Design of the monitoring installation

5.1.1 The monitoring installation (figure 5) consists of a device for detecting contamination of arms by β-active matters with the built-in device of processing and displaying the obtained information (unit "Arms"), device for detecting contamination of legs (footwear) by β-active matters (unit "Legs") and external BDZA-96 unit for detecting contamination by α-active matters.

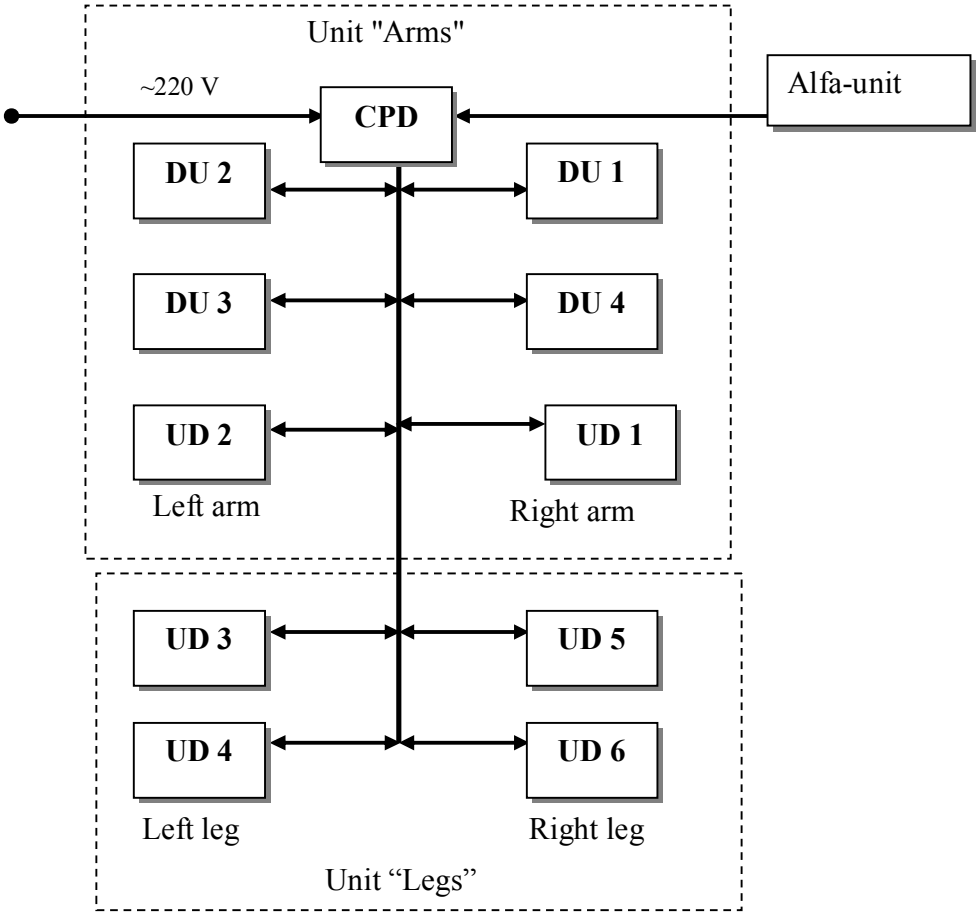

Figure 5 - General block-diagram of the monitoring installation

5.1.2 The unit "Arms" is the main unit of the monitoring installation and contains:

- central processor device (CPD);
- four display units (DU);
- two detecting units of β-radiation (UD) with photosensors of object presence.

The UD of a right arm is structurally executed as a demountable unit and can be used for detecting contamination of other parts of a body or overalls.

The unit "Arms" can be used without the unit "Legs", as an autonomous unit, and has connectors for connecting to AC mains with supply voltage of 220V and external BDZA-96 unit for detecting contamination by α-active matters.

5.1.3 The unit "Legs" contains four UDs with photosensors of object presence and can be used only together with the unit "Arms", which is fastened using two racks.

5.1.4 The CPD, DU and UD are made as separate printed circuit boards, which are connected parallel using 10 wire cable (harness) ensuring a power supply of devices and information transmission according to the requirements of the standard interface bus I2C (Inter-Integrated Circuit Bus).

The CPD executes the functions of a master device, and another units – a function of slave devices, at that, the unique address is assigned to each slave device structurally (in the connector of a wire cable).

All the UDs and DU printed circuit boards are interchangeable, permit rearrangement and replacement of units without additional adjustment and checking.

5.1.5 The operation of the monitoring installation, when detecting β-radiation, is performed as follows:

- the CPD sets all the UDs to performing a pulse counting with checking of excess of a specified threshold of contamination and with the registration of a previously measured background;
- the CPD determines the moment of installation of arms and legs on a measuring site proceeding from the condition of photosensors of object presence, and gives a command to start counting on all the UDs;
- the UD performs contamination measurement of object, placed on it, compares the obtained value with the threshold value and send signal to the CPD about finishing the measurement;
- the CPD, having received a signal about finishing the measurement with the UD, reads out count results, processes them using the calibration data stored in a nonvolatile memory of the UD and outputs a final result to the appropriate DU.

At detecting of α-radiation, the pulses from the external BDZA-96 unit go directly into the CPD, where they are calculated and processed using the calibration data stored in a nonvolatile memory of the CPD. The final result is output to one of the DUs.

5.1.6 The block-diagram of a central processor device is shown in figure 6 and contains:

- stabilized power supply unit (SSU);
- single-chip microcontroller (SMC);
- power supply supervisor of the microcontroller (SF);
- nonvolatile memory (SROM);
- pulse shaper (PS) BDZA-96;
- audio-signal generator (SG);
- connectors for connecting the UD, DU and BDZA-96.

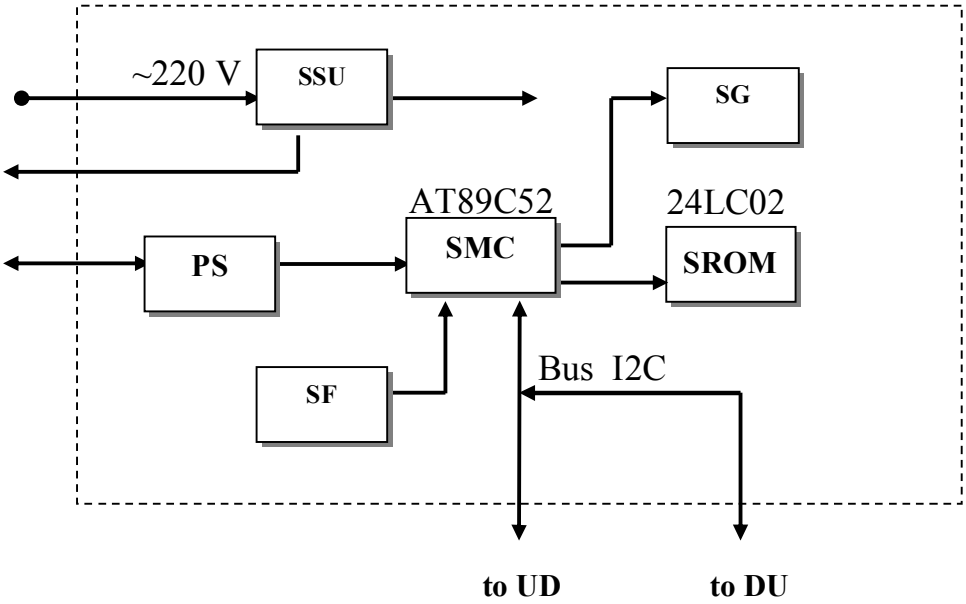

Figure 6 - Block-diagram of a central processor device

The SSU generates a stabilized voltage +5V to provide a power supply of the microcontroller, DU and UD, and also a voltage +7V for feeding the external BDZA-96 unit for detecting contamination by α-active matters.

The SMC (microprocessor AT89C52) carried out a program control of all parts of the monitoring installation, data processing and its transfer via the I2C bus.

The SF is intended to control the +5V voltage, feeding the SMC, and to restart the last in case of an inadmissible decrease or momentary cut-out of a line supply voltage. With this, the operation of the monitoring installation is similar to operation after turning on the «Сеть» (“Power”) switch.

The nonvolatile memory (AT24LC02B) with serial data transfer serves for storage of the calibration information for the external BDZA-96unit for detecting contamination by α-active matters, and also other information about functioning of the monitoring installation as a whole.

In connection with the fact that the pulse duration generated by the external BDZA-96 unit is less than the value required for the sure count with the SMC, the FS, expanding a pulse duration approximately for 3 mcs, is used.

The audio-signal generator is used for signalling on measurement termination and in other cases, when it is required to attract attention of the user or attending personnel.

The separate connectors for connecting the group of display units and group of detecting units are installed on the CPD board that allows to simplify operation when adjusting the equipment. The third connector is intended for connection with the external BDZA-96 detecting unit, and also for query of end sensors of remote units’ position and key of the sanction of transition to a setup mode.

5.1.7 The block-diagram of the UD is shown in figure 7 and contains:

- microcontroller (PIC);
- nonvolatile memory (SROM);
- pulse converter of voltage (PCV);
- six gas-discharge G-M counters such as Beta - 2 (BD1 … BD6);
- six binary pulse counters (CT2);
- photocurrent amplifier (APC).

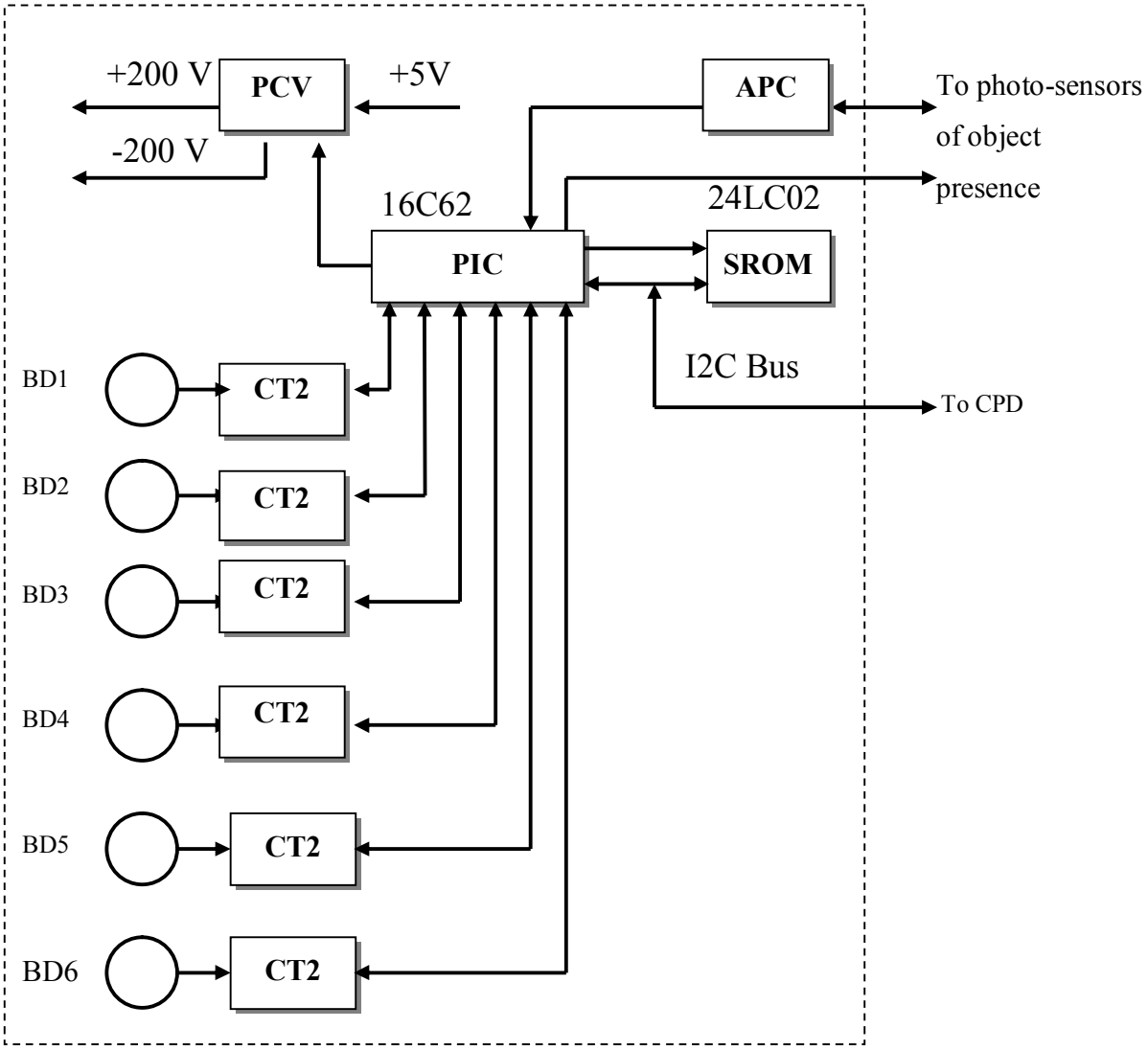

Figure 7 - Block-diagram of a beta-detector

The UD is a functionally completed microprocessor device with the I2C interface, which requires an external power supply with a stabilized voltage of +5V, and permits to make counting and processing of pulses in several modes.

The UD can operate both autonomously, and under the control of an external controller together with other devices integrated in a common measuring system using the I2C bus.

The operating supply voltage of 400V for the Beta-2 counters is formed by a bridge PCV with an external excitation that operates at fixed frequency generated by the PIC-controller.

The pulses from each gas-discharge counter income at the input of its own binary two-digit counter with reset (CT2) for preliminary accumulation. The PIC-controller reads out the readings of preliminary counters each millisecond and resets them, storing a total sum during measurement on each of six channels. Thus, the possibility of controlling the functionability of each gas-discharge Beta – 2 counter and signalling of its failure is provided.

The nonvolatile memory (SROM) is intended for storage of the calibration data of the unit for each isotope monitored and other information, the access to which one is performed via the I2C bus.

The measuring system can contain some simultaneously working UDs, which have unique slave-addresses, and SROM in each of them have the same slave-address. Thus, only one SROM chip should actively function on the I2C bus in each instant. It is reached by enabling/disabling a power supply of its SROM by the PIC-controller of the UD through the command via the I2C bus.

Each detecting unit has an input for connecting a photosensor of object presence, designed as a diode optoelectronic coupler with an opened light channel. When performing a query of a such sensor status, the PIC-controller generates a supply pulse of the light-diode radiator and checks a signal level incoming from the photodiode receiver through the APC.

Constructively, the UD is made as a plate with mounted on it gas-discharge counters and printed circuit boards closed by a metallic cover.

For connection with the monitoring installation the UD has 14- wire cable ending in the connector.

When installing into the unit "Arms" or "Legs", the UD is covered by a lavsan film and removable grating, which provide mechanical protection and damp-proofing, and also ease of deactivation.

5.1.8 The detecting BDZA-96 unit is a functionally and constructively completed device which requires an external power supply with a stabilized voltage of +7V and generates positive pulses with duration of 1 … 2 mcs and frequency, proportional to flux density of α-particles.

5.1.9 The DU is a functionally completed microprocessor device with the I2C interface that requires an external power supply with a stabilized voltage of +5B.

The DU allows to display information as a numeric value on 4-digit seven-segment light-emitting-diode indicator and by means of three check light-emitting diodes (green, yellow, red), and also to enter information using three buttons.

The DU is made on a separate printed circuit board with an interface connector and is fastened using four screws from the backside of the display and control panel.

5.1.10 The display and control panel, which appearance is shown in figure 8, contains four interchangeable DUs, and is intended for displaying measurement results, viewing the specified parameters, adjusting and checking the monitoring installation.

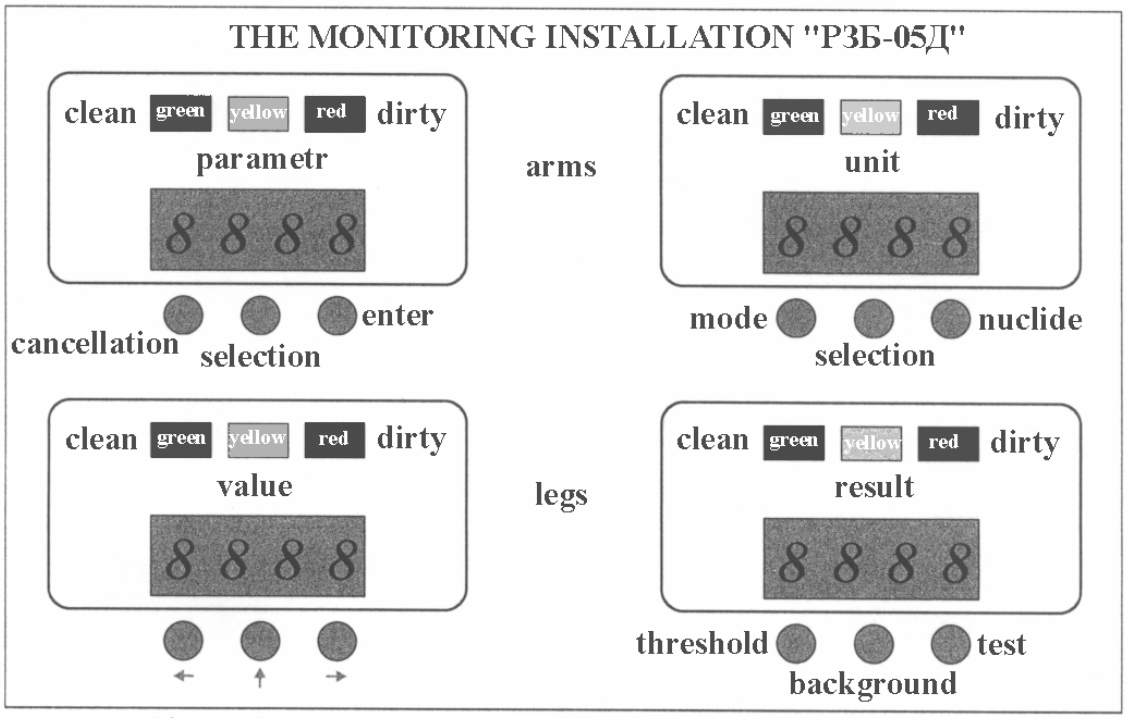

Figure 8 - Appearance of the display and control panel

The whole panel is divided into four information zones, upper of which concern the results of measurement of the left and right hand, accordingly, and lower zones –of the left and right leg, accordingly.

In each information zone there is a four-digit indicator for displaying a numeric value of measurement result of surface contamination in min^{-1} cm^{-2}, and three light-emitting diode indicators showing the result of its comparison with maximum permissible levels of contamination by β- or α-active matters (thresholds): "green" – clean, "red" - dirty, "yellow" - measurement process.

The control buttons, marked by a primary color, are accessible in the basic operational mode, and these marked by an additional dark color, are accessible only in setup and calibration modes.

The assignment of buttons is listed in Table 5.

Table 5.

	Button name	Basic mode	Setup and calibration modes
Zone of the left hand "Parameter" field	CANCELLATION	not used	Cancellation of value editing in the "Value" zone
	SELECTION	not used	Parameter selection
	ENTRY	not used	Entry of the value entered in the "Value" zone
the right hand "Unit"	MODE	not used	not used
	SELECTION	not used	Selection of the detecting unit

	Button name	Basic mode	Setup and calibration modes
	NUCLIDE	Viewing the name of a measured nuclide	Selection of a nuclide
Zone of the left leg "Value" field	←	not used	Moving to the left along the digits when setting the parameter value
	↑	not used	Search for numbers within the digit when setting the parameter value
	→	not use	Moving to the right along the digits when setting the parameter value
Zone of the right leg "Results" Field	THRESHOLD	Viewing of the specified thresholds	not used
	BACKGROUND	Viewing of background values	not used
	TEST	1) Starting the measurement irrespective of object presence 2) Starting the measurement at using the remote BDZA-96 detecting unit	Starting the measurement

5.2 Operation principle of the montoring istallation

The operation of the monitoring installation is based on calculation of the number of pulses, N_x, generated for time t_x in detecting units under effect of ionizing radiations, and further mathematical processing with using models and algorithms to be considered further.

5.2.1 Mathematical model of the beta - detector.

A conversion function of one gas-discharge Beta – 2 counter can be presented as follows

$$Y_x = \frac{100}{E} \cdot \frac{60}{a} \cdot \frac{F_x}{(1 - F_x \cdot \tau)}, \qquad (1)$$

where Y_x - estimation of beta-parts flux density, [min^{-1} · cm^2];

E - efficiency of a counter, %;

a - effective area of a counter, cm^2;

τ - dead time of a counter, c;

$F_x = N_x / t_x$ - pulse repetition frequency, Hz;

t_x - pulse accumulation time, s;

N_x –number of pulses registered.

When registrating a total number of pulses generated by the unit from k of Beta - 2 counters, and saving a physical sense of values E and τ, the conversion function of the unit looks like

$$Y_x^k = \frac{100}{E} \cdot \frac{60}{a} \cdot \frac{F_x}{(k - F_x \cdot \tau)} \tag{2}$$

or, taking into account $a = 10\ cm^2$ and $k = 6$

$$Y_x = \frac{600}{E} \cdot \frac{F_x}{(6 - F_x \cdot \tau)} \tag{3}$$

Even in absence of the object to be measured, the beta-detector generates pulses, which can be caused by an ambient gamma - background, intrinsic background of counters or contamination of a surface of the detector by β-active matters.

Taking into account that the background level should not exceed values lying on a linear part of the conversion characteristic of the detector, it can be written as follows

$$Y_{fon} = \frac{600}{E} \cdot \frac{F_{fon}}{6} = \frac{100}{E} \cdot F_{fon} \tag{4}$$

Having determined the background level before installing the object checked, the contamination level of the last with taking into account (3) and (4) can be presented as follows

$$Y_o = Y_x - Y_{fon} = \frac{100}{E} \cdot \left[\frac{6 \cdot F_x}{6 - F_x \cdot \tau} - F_{fon} \right] \tag{5}$$

The measuring error of flux density depends mainly on a random relative error of registration of the number of pulses, the limiting value of which one can be determined as follows

$$\gamma_N = \frac{2 \cdot \sqrt{N_x}}{N_x} \cdot 100 = \frac{200}{\sqrt{N_x}}\ \% \tag{6}$$

Therefore, for obtaining a measuring error less than the specified γ_o, %, the number of accumulated pulses should meet condition

$$N_x \geq \frac{4 \cdot 10^4}{\gamma_o^2} \tag{7}$$

5.2.2 Control of measured object contamination.

The control of object contamination is performed by measuring β-radiation flux density, Y_o, coming from the measured object, and its comparison with a maximum permissible level of β-radiation, Y_n, called a contamination threshold.

Taking into account that the value $Y_x = Y_o + Y_{fon}$ is measured with a absolute error $\pm \Delta Y_x$, the conditions, under which one can make unambiguous conclusion about object contamination, are formulated as follows

"Precisely clean" - $Y_x + \Delta Y_x \leq Y_n + Y_{fon}$ (8)

"Precisely dirty" - $Y_x - \Delta Y_x > Y_n + Y_{fon}$ (9)

If the conditions (8) and (9) are not satisfied, it is necessary:

- either to reduce a measuring error by increasing time of pulse accumulation;
- either to take compromise decision by comparison $Y_x \leftrightarrow Y_n + Y_{fon}$ without regard for a measurement error.

As the measurement result and its error are related to the registered number of pulses, it is more convenient to pass to conditions on N, that is $Y_x \to N_x$, $Y_n \to N_n$ and $Y_{fon} \to N_{fon}$. For this purpose, using (3), we shall receive an inverse function of conversion

$$F_x = \frac{N_x}{t_x} = \frac{6}{\frac{600}{EY_x} + \tau} \tag{10}$$

Having applied (6) and (10), we receive the following conditions instead of (8) and (9)

$$\text{"Precisely clean" - } \frac{N_x + 2 \cdot \sqrt{N_x}}{t_x} \le P_o \tag{11}$$

$$\text{"Precisely dirty" - } \frac{N_x - 2 \cdot \sqrt{N_x}}{t_x} > P_o \tag{12}$$

where $P_o = \dfrac{6}{\frac{600}{E \cdot (Y_n + Y_{fon})} + \tau}$

The time of measurement t_x, required for unambiguous conclusion about object's contamination, depends on a ratio of values Y_x and $Y_n + Y_{fon}$ and can make from units up to tens of seconds. Thus, after starting the process of pulse accumulation, N_x, it is necessary to check up periodically the fulfillment of conditions (11) and (12).

In the monitoring installation such check is performed every 2 seconds within 30 seconds, i.e. $t_x = 2i$, where $i = 1...15$ is the measurement step number.

With this, conditions (11) and (12) will take the following view:

$$\text{Precisely dirty" – } N_i > \left(\sqrt{1 + 2 \cdot i \cdot P_o} + 1\right)^2 = P_i^+ \tag{13}$$

$$\text{"Precisely clean" – } N_i \le \left(\sqrt{1 + 2 \cdot i \cdot P_o} - 1\right)^2 = P_i^- \tag{14}$$

where N_i is a total number of pulses accumulated within *i* measurement steps.

If any of conditions (13), (14) is not satisfied on the 15-th step, the decision is made proceeding from the following principle

$$\text{"Dirty" - } N_{15} \ge 30 \cdot P_o \tag{15}$$

$$\text{"Clean" - } N_{15} < 30 \cdot P_o \tag{16}$$

From the formulas (13) and (14) one can see, that the values of quantities P_i^- and P_i^+ for all steps of the measurement can be calculated beforehand and should be updated only at change of Y_n or Y_{fon}.

5.2.3 Measurement of a background.

At turning on the monitoring installation, the background level of each detector is measured within 25 seconds and stored in its RAM.

During the further operation, the CPD controlling a condition of photosensors, determines the moment, when the objects are absent on all detectors, and starts again a background measurement after delay per 5 seconds. The new value of a background is determined as an arithmetical mean of values obtained as a result of measurement and these stored in the RAM. The table of values P_i^- and P_i^+ is renovated along with updating a background level in the RAM.

At appearance of the object on any of the detectors during the measurement of a background, it is interrupted and a background value is not changed.

5.2.4 Calibration of detectors.

From a function (5) one can see, that the values of quantities E and τ should be determined for each detector with a required accuracy before performing measurements.

The efficiency of the detector E determines a slope of a linear part of an actual conversion characteristic at low levels of a measured β-radiation flux density, and the dead time τ corrects nonlinearity of the characteristic at high levels.

For determination of E and τ, at least two operating standards of Category 2 of 6CO CP1 (100…1000 $min^{-1}cm^{-2}$) and CP2 (3000…9000 $min^{-1}cm^{-2}$) types with a known flux density Y_{CP1} and Y_{CP2}, lying in the center of a linear area and in the top of the full conversion characteristic, accordingly, should be used.

After measuring a background level in absence of calibration plates F_{fon}, a CP1 plate is installed and F_{CP1} is measured.

The efficiency value of the beta - detector is evaluated by the following expression

$$E_\beta = \frac{100}{Y_{CP1}} \cdot \left(F_{CP1} - F_{fon}\right) \tag{17}$$

Then, a CP2 plate is installed and F_{CP2} is measured.

Dead time is evaluated by the following expression

$$\tau_\beta = \frac{6}{F_{CP2}} - \frac{600}{E \cdot Y_{CP2} + 100 \cdot F_{fon}} \tag{18}$$

The obtained values are stored in a nonvolatile memory of each detector and used later by the CPD for representation of measurement results.

The calibration of the BDZA-96 unit is carried out similarly, using the same ratio, and differs only in the fact that the background level is equated to zero, and all calibration factors are stored in a nonvolatile memory of the CPD.

6 LABELLING AND SEALING

6.1 On each unit being part of the monitoring installation, the following marking identifications are made:

- trade mark of the enterprise - manufacturer;
- conventional designation;
- factory serial number;
- year of manufacturing.

6.2 Sealing of the UD is made by mastic, which fills a recess for the head of one of screws, fastening a cover to the unit.

7 TARE AND PACKAGING

7.1 Before packaging it is necessary to prepare the monitoring installation, kit of spares and operating documentation as follows:

a) subject the monitoring installation to conservation in accordance with the technique described in item 18.3 of this manual;

б) put the kit of spares, connecting cables and operating documentation into polyethylene bags.

7.2 At packaging it is necessary to fill in all free places by a corrugated cardboard for preventing movement inside tare.

8 SAFETY MEASURES

8.1 Before operating the monitoring installation it is necessary to acquaint with this operation manual.

8.2 When operating the monitoring installation, the following safety measures should be followed:

a) the monitoring installation should be safely grounded using an electrical connection of the terminal «⊥», arranged on a back panel of the unit "Arms", to the grounding mat. The cross-section of a grounding conductor should be no less than 1,5 mm^2.

b) the attending personnel should be familiar with and observe operating instructions of electric installations and safety precaution regulations when operating the installations.

8.3 When performing routine maintenance and repair, it is not allowed to leave the monitoring installation alive with a removed cover without supervision.

8.4 When operating the monitoring installation, it is necessary to observe sanitary regulations and norms of radiation safety.

9 SEQUENCE OF MOUNTING

9.1 The monitoring installation can be installed both on a horizontal floor surface (RZB-05D-01 and RZB-05D-02 models), and on horizontal desk surface (RZB-05D-03 and RZB-05D-04 models).

9.2 The monitoring installation is intended for operation in rooms free of vapors of acids, alkalis and aggressive gases. The ambient temperature should be in the range of from minus 10° to +50°C, relative humidity - no more than 95 % at temperature +35°C, atmospheric pressure in the range of 86 to 106 kPa (650…800 mm.Hg).

9.3 If the monitoring installation was under conditions with temperature below from minus 10°C, then it should be maintained under operating conditions within 24 hours before turning it on

10 PREPARATION OF THE MONITORING INSTALLATION FOR OPERATION

10.1 The monitoring installation is maintained by a person, having a special training and familiar with this technical description.

10.2 Mount the monitoring installation on a workstation.

10.3 Ground safely the monitoring installation according to the requirement of item 8.2 of this technical description.

10.4 Connect the AC cable and remote detecting BDZA-96 (RZB-05D-01 and RZB-05D-03 models) unit. Insert a cable plug into a socket with AC voltage of 220V.

10.5 Put the “Power” switch to ON position. Let the monitoring installation to warm up within 5 minutes.

10.6 After powering on, the installation passes in a mode of testing. First, all light-emitting diodes and segments of indicators on the display and control panel are on, then the installation passes in a mode of automatic measurement of an intrinsic background of all the UDs. With this, on all indicators the message "____" appears. The measurement duration is about 100 seconds. After performing the measurement, the result as "FXXX" is displayed. Further measurement of an intrinsic background is made permanently before appearing the measurement object.

In the case of failure of one of the UDs or excess of a self-contamination threshold, the error code "ErXY" for the appropriate UD is displayed, and the red light-emitting diode is on. The list of faults is given in Table 8 (item 16.2).

10.7 The factors ξ (See Appendix A TD) and threshold values of the alarm signalling for various nuclides have been stored by the enterprise - manufacturer in a nonvolatile memory of the UD. The sequence of nuclides and their designation are included into the logbook of the device

The threshold values of the alarm signalling for various nuclides are summarized in the following Table:

Nuclide	Nuclide designation *	Threshold value, $min^{-1}cm^{-2}$
Sr-90Y-90	n0	20
Tl-204, F-18	n1	100
Cs-137	n2	100
Co-60, Tc-99	n3	100
O-15	n4	100
N-13, Sr-89	n5	100
C-11	n6	100
I-131, Na-22	n7	100
Ru-106Rh-106	n8	100
Tc-99m и I-123	n9	9000
* - The sequence of nuclides and their designation are included into the logbook of the device		

If required, set another threshold value of the alarm signalling (see item.11 of this TD).

It is necessary to avoid setting too low values (close to the background value of the UD), since it will cause increasing the measurement time of the object.

11 OPERATION PROCEDURE

11.1 Determination of contamination of arms and legs (footwear) by β-active matters should be performed in the following sequence.

Get up on the basis of the device (unit "Legs") so that feet of legs have appeared on the middle of grounds (RZB-05D-01 and RZB-05D-02 models). Apply the palms of arms to detecting units of the upper unit (unit "Arms") so that to overlap an optical axis of sensors of object presence. If all optical axises of sensors are overlapped, the monitoring installation will pass in a mode of measurement. With this, all yellow light-emitting diodes on the control and indication panel will light on and on all indicators "----" will appear.

Do not change arrangement of legs and arms until a short audio signal (all "Clean") or series of short audio pulses (even one unit has fixed "Dirty") sounds and red ("Dirty") or green ("Clean ") light-emitting diodes on the panel is on. The measurement time makes from 2 to 30 seconds and depends on a set threshold value and degree of object contamination. Remove arms from sensors of the upper unit and leave the basis of the installation.

The indicator readings will correspond to measured flux densities for arms and legs. For nuclides n0 – n8 -in an integer-valued format «XXXX», for a nuclide n9 (γ-radiation) - in a decimal format X.X**E**X (for example, 4.1E2 will correspond to 4100 $min^{-1}cm^{-2}$).

11.2 Determination of contamination of a body (clothes) by β-active matters using a remote detecting unit should be carried out in the following sequence.

Standing on a basis of the installation or near it, touch the lever of the detecting unit of a right hand and remove it. On the indicator in the "Unit" field an inscription "bEtA" will appear, which means, that the measurements will be made with a remote detecting unit of β-radiation. On the indicator, in the "Parameter" field an inscription "P" ("Threshold") will appear, and on the indicator, in the "Value" field the set threshold value will be displayed. Apply the remote unit to the examined part of a body (clothes).

To start the measurement, overlap by an arm, and then make free the sensor of object presence of a right hand, or press the "Test" button. On the indicator in the "Result" field an inscription "----" will appear, and the yellow light-emitting diode will turn on.

Do not change arrangement of the sensor until the short audio signal ("Clean") or a series of short audio pulses ("Dirty") sounds, and red ("Dirty") or green ("Clean") light-emitting diodes on the panel are on. The measurement time of the object makes from 2 to 30 seconds and depends on the set threshold value and contamination degree of object.

Repeat measurements on the other parts of a body (clothes). After finishing measurements place carefully the unit on its nominal place, pushing it into up to typical "click" of the latch.

11.3 Determination of contamination of a body (clothes) by α-active matters with the remote BDZA-96 detecting unit (RZB-05D-01 and RZB-05D-03 models)should be carried out in the following sequence.

Standing on a basis of the installation or near it, touch a mean part of the detecting BDZA-96 unit located on a back panel of unit "Arms" and remove it from brackets. On the indicator in the "Unit" field an inscription "ALFA" will appear, which means, that the measurements will be made

by the remote detecting unit of α-radiation. On the indicator, in the "Parameter" field an inscription "P" ("Threshold") will appear, and on the indicator, in the "Value" field the set threshold value will be displayed. Remove a protective cover from the remote unit and apply the unit by a broad part to the examined part of a body (clothes).

To start the measurement, overlap by an arm, and then make free the sensor of object presence of a right hand, or press the "Test" button. On the indicator, in the “Result” field an inscription "----" will appear, and the yellow light-emitting diode will turn on.

Do not change arrangement of the sensor until the short audio signal ("Clean") or a series of short audio pulses ("Dirty") sounds, and red ("Dirty") or green ("Clean") light-emitting diodes on the panel are on. The measurement time of object makes from 2 to 30 seconds and depends on the set threshold value and contamination degree of object.

Repeat measurements on other parts of a body (clothes).

After finishing the measurement place carefully the unit on its place.

11.4 To view the set threshold values, press the "Threshold" button in a right lower corner of the display and control panel. The values of response levels of the alarm signalling ($min^{-1}cm^{-2}$) for detecting units of arms and legs will appear on indicators. The threshold values are displayed until pressing other buttons or beginning the measurement process.

11.5 To view a background value of detecting units, press the "Background" button in a right lower corner of the display and control panel. The indicator readings will correspond to the background values for detecting units. For nuclides n0 – n8 - in an integer-valued format «XXXX», for a nuclide n9 (γ-radiation) – in a decimal format X.X**E**X (for example, 0.4E4 will correspond to 4000 $min^{-1}cm^{-2}$).

The background values are displayed until pressing other buttons or beginning the measurement process.

11.6 To view the set type of a nuclide measured, press the "Nuclide" button in a right upper corner of the display and control panel. On indicators, names of nuclides measured of detecting units of arms and legs as «n0» at contamination measurement on Strontium 90 - Yttrium 90, and «n<nuclide number >» at contamination measurement on nuclides 1-9. The nuclide number is displayed until pressing other buttons or beginning the measurement process.

11.7 To start the measurements irrespective of presence of object, press the"Test" button in a right lower corner of the display and control panel. On indicators, the "----" inscription will appear, all yellow light-emitting diodes will turn on and the short audio signal will sound when the measurement stops. The measured values will appear on indicators.

12 CALIBRATION TECHNIQUES

12.1 Devices and equipment

The devices and equipment required for calibration are listed in Table 6.

Table 6

Name	Type	Quantity
Operating standard Sr-90Y-90 of Category2	6СО	3
Operating standard Pu-239 of Category 2	5П9	3

12.2 Calibration conditions

12.2.1 Calibration should be performed in accordance with the State Standard (GOST)8.070-95 at a natural radiation background under normal climatic conditions:

- ambient temperature (20 ±5) °C;
- relative humidity of air from 30 to 80 %;
- atmospheric pressure from 84 up to 106 kPa.

12.2.2 The primary calibration should be performed for the monitoring installation delivered from the manufacture and after repair which caused graduation of the installation.

The periodical calibration should be performed for the monitoring installation being in operation and storage.

12.2.3 Calibration of the monitoring installation is performed by territorial bodies of the State Committee on Standards once per year for the monitoring installation being in operation, and once per three years for the monitoring installation being in storage.

12.3 Calibration procedure

Conduct a visual inspection of the installation, paying attention to the following:

- complete set of the installation;
- availability of a calibration certificate (at re-calibration);
- presence and safety of marking;
- absence of corrosion, impurities, damages.

12.3.2 Check a general functionability of the installation, performing operations according to items 10, 11.

12.3.3 Determine values of basic errors of flux density measurements of α-, β-radiation according to the technique described in items 13, 14.

12.3.4 At a negative result of calibration in case if the measuring error does not fall outside the limits of 0.5-1.5 from a rated value, perform setup of the device according to item 15 (*Setup*) and repeat calibration according to 12.3.3.

12.3.5 In case if the measuring error is outside the stated limits, the device is subjected to repair at the enterprise - manufacturer.

12.4 Executing of calibration results

The calibration results are executed by the calibration certificate.

13 DETERMINATION OF BASIC MEASUREMENT ERROR VALUE OF B-RADIATION FLUX DENSITY

Prepare for operation and switch on the monitoring installation according to item 10.

After performing an automatic self-test and measurement of a background make sure that a nuclide 0 (Sr90-Y-90, item11.6) is selected.

In the case if the another nuclide is chosen, pass in a setup mode (15.1), select a mode of setting an alarm response threshold (15.4) and chose a nuclide 0 by pressing the “Nuclide” button. Exit from the setup mode (15.12).

After performing an automatic measurement of a background, overlap an optical axis of the sensor of object presence of the selected UD, arrange on it a flat source of a 6CO type (no below than Category 2) and perform no less than 5 measurements using the "Test" button (11.7).

Determine a basic error of measurements in percentage by a formula

$$\Theta_m = \frac{P - P_0}{P_0} \cdot 100, \qquad (19)$$

where P - is a mean arithmetic reading of the monitoring installation at each value of β-radiation flux density mentioned below;

P_0 - is a true value of β-radiation flux density.

The value of basic error for all values should not fall outside the limits, indicated in Table 2.

Carry out the measurements on plates with a rated value of β-radiation flux density of 100,0 - 300; 3000 - 5000; 7000 - 9000 $min^{-1}cm^{-2}$. Setup.

If the setup is required (value of basic error falls outside the limits indicated in Table 3), carry out operations of item 15 (*Setup*).

14 DETERMINATION OF BASIC ERROR VALUE AND MEASUREMENT RANGE OF A-RADIATION FLUX DENSITY

Prepare for operation and switch on the monitoring installation according to item 10.

After performing an automatic self-test and measurement of a background, remove the remote BDZA-96 unit from brackets, remove a protective cover and place it on a flat source of 5П9 type (no below than Category 2) and perform no less than 5 measurements according to item 11.3.

Determine a basic error of measurements in percentage by a formula

$$\Theta_m = \frac{P - P_0}{P_0} \cdot 100, \qquad (20)$$

where P - is a mean arithmetic reading of the monitoring installation at each value of α-radiation flux density mentioned below;

P_0 - is a true value of α-radiation flux density.

The value of basic error for the entire measurement range should not fall outside the limits, indicated in Table 2.

Carry out the measurements on plates with a rated value of α-radiation flux density of 50 – 300; 3000 - 5000; 7000 - 9000 $min^{-1}cm^{-2}$. Setup.

If the value of a basic error falls outside the limits, indicated in Table 3, perform operations of item 15 (*Setup*).

15 SETUP OF THE MONITORING INSTALLATION

15.1 Transition to setup mode of the monitoring installation

Prepare for operation and switch on the monitoring installation according to item 10.

To pass in a setup mode of the monitoring installation, turn the key of access located on a back panel of the unit "Arms", and press the "Mode" button located in the "Unit" field of the display and control panel. The installation will pass in a setup mode.

If the key of access is on the horizontal position, then at powering on the monitoring installation pass directly in a setup mode.

With this, a number of the detecting unit adjusted, as "d1" will appear in the "Unit" field. In the "Parameter" field the parameter name as "StAt" will appear. In the “Value” field the value of a selected parameter will appear.

15.2 Checking operation of the sensor of object presence

Pass in a setup mode of the monitoring installation, according to item 15.1.

Select the unit by clicking the "Selection" button in the "Unit" field (d1-d2-d3-d4-d5-d6-ALFA-d1 etc.). Select the parameter "StAt" («for n0»: StAt-Fon-P-EFF-tAU-CP1-CP2-StAt, etc; for «n1-n9»: StAt-Fon-P-EFFn-StAt) in the "Parameter" field by clicking the button "Selection" of this field.

In the "Result" field the parameter value as "00" or “01”will appear. To check the operation of sensor of object presence of this unit, overlap the appropriate light-emitting diode pair. If the sensor is good, a parameter value should to change for " 80" or “81”.

15.3 Measurement of a background of detecting unit in a setup mode

The background of the UD is automatically measured and stored after turning on the monitoring installation in the main mode. If the measurement of a background was not finished, it can be repeated in a setup mode. For this purpose perform the following operations.

Pass in setup mode of the monitoring installation, according to item 15.1.

Select the unit by clicking the"Selection" button of the "Unit" field (d1-d2-d3-d4-d5-d6-ALFA- CPU-CHEC -d1 etc.). Select the "Fon" (for «n0»: StAt-Fon-P-EFF-tAU-CP1-CP2-StAt, etc.; for «n1-n9»: StAt-Fon-P-EFFn-StAt) parameter in the "Parameter" field by clicking the "Selection" button of this field.

The current value of a background as "XXXX" will appear in the "Value" field. If a background has not been measured yet, the value can be whatever. To perform the measurement of a background, press the "Test" button in the "Result" field. On the right lower indicator (in the "Result" field) the message "____" will be displayed for 30 seconds, and then a new measured background value of the UD as "XXXX" will appear. To store a new value of a background, press the "Enter" button in the "Parameter" field. Then the old value of a background in the "Value" field will be replaced by the new one.

15.4 Setting a response threshold of the alarm signalling system

Pass in setup mode of the monitoring installation, according to item 15.1.

Select the detecting unit by clicking the "Selection" button of the "Unit" field (d1-d2-d3-d4-d5-d6-ALFA-CPU-CHEC -d1 etc.) and an isotope type (for d1 … d6) by pressing the "Nuclide" button. With this, in two last digits of the indicator the «n0» (for Sr90-Y90) or «n1-n9» (for other nuclides) message will be displayed.

Select the parameter "P" (for «n0»: StAt-Fon-P-EFF-tAU-CP1-CP2-StAt, etc.; for «n1-n9»: StAt-Fon-P-EFFn-StAt) in the "Parameter" field by clicking the "Selection" button. The threshold value as "XXXX" will appear in the "Value" field.

To change a parameter value, press any of the "←", "↑", "→" buttons. With this one of digits in the "Value" field will begin to flash. Select the position using the "←", "→" buttons, and set a value of a flashing digit using the "↑" button.

After editing a parameter value, it can be stored by clicking the "Enter" button in the "Parameter" field, and it is possible to refuse change by clicking the "Refusal" button in the "Parameter" field. Then in the "Value" field a new or old parameter value, accordingly, will appear, and the digits will stop to flash.

The setup of thresholds should be performed separately for each detecting unit. It is not recommended to set a threshold for the UD lower than 10 $min^{-1}cm^{-2}$, because it can result in considerable increase of measurement time of object in the main mode.

If required, perform the measurement with the selected detecting unit, not exiting from a threshold setting mode. For this purpose press the "Test" button in the "Result" field. The installation will pass in the mode of measurement with the selected detecting unit. In the "Result" field the message "----" will appear for 4-32 seconds, and then measured value as "XXXX" will be displayed.

15.5 Autoadjustment of efficiency of the detecting unit on strontium-90 yttrium – 90

Pass in setup mode of the monitoring installation, according to item 15.1.

The detecting unit d1 … d6 is selected by clicking the "Selection" button in the "Unit" field. **Remove all radiation sources from the unit to be adjusted.**

Perform the measurement and update the background value of the detector according to item 15.3.

Select the “CP1” parameter in the “Parameter” field by pressing the “Selection” button.

Make sure the Strontium-Yttrium isotope is selected (on the indicator, in the "Unit" field after the unit number the «n0» message is displayed), or chose it by pressing the “Nuclide” button.

In the “Value” field a flux density value of the source against which the UD was adjusted during the previous calibration, will appear as «XXXX».

Set the flux density value in the range of 100-1000 $min^{-1}cm^{-2}$, corresponding to the selected source, using the «←», «↑», «→», buttons, and press the «Enter» button in the “Parameter” field, to store it.

Arrange the source of the 6CO type with a flux density of 100-1000 $min^{-1}cm^{-2}$ on the selected UD.

Press the “Test” button in the “Result” field. The installation will pass in a measurement mode with a selected detecting unit. With this, the "----" message will appear in the "Result" field for 10 seconds, and then the measured value as "XXXX", which should coincide with this set in the "Value" field, will be displayed. The installation will automatically change the efficiency value of the selected unit.

15.6 Autoadjustment of a dead time of the detecting unit on strontium-90 yttrium – 90

Pass in setup mode of the monitoring installation, according to item 15.1.

Perform an auto adjustment of the unit’s efficiency according to item 15.5.

Select the “CP2” parameter in the “Parameter” field pressing the "Selection" button.

Make sure the Strontium-Yttrium isotope is selected (on the indicator in the “Unit” field after the unit number the «n» is displayed), and select it using the “Nuclide” button.

In the "Value" field a flux density value of the source against which the UD was adjusted during the previous calibration, will appear as XXXX".

Set the flux density value within 5000-9000 $min^{-1}cm^{-2}$, corresponding to the selected UD, using the "←", "↑", "→" buttons, and press the “Enter” button in the "Parameter" field for its storage.

Arrange the source of the 6CO type with flux density of 5000-9000 $min^{-1}cm^{-2}$ of the selected UD.

Press the “Test” button in the “Result” field. The installation will pass in the measurement mode with the selected detecting unit. With this, the "----" message will appear in the “Result” field for 20 seconds, and then the measured value as "XXXX", which should coincide with this set in the "Value" field, will be displayed. The installation will automatically change the dead time value of the selected unit, but the efficiency value will not change.

15.7 Autoadjustment of efficiency of the remote bdza-96 detecting unit

Pass in a setup mode of the monitoring installation, according to item 15.1.

The detecting unit "ALFA" is selected by clicking the "Selection" button in the “Unit” field.

Select the “CP1” parameter by clicking the "Selection" button in the "Parameter" field. In the "Value" field a flux density value of the source against which the UD was adjusted during the previous calibration will appear as "XXXX".

Set a flux density value within 100-1000 $min^{-1}cm^{-2}$, corresponding to the selected UD, using the "←", "↑", "→" buttons, and press the “Enter” button in the "Parameter" field for its storage.

Arrange the unit on a source of the 5П9 type with a flux density value of 100-1000 $min^{-1}cm^{-2}$.

Press the “Test” button in the “Result” field. The installation will pass in the measurement mode with the selected detecting unit. With this, the "----" message will appear in the “Result” field for 10 seconds, and then the measured value as "XXXX", which should coincide with this set in the "Value" field, will be displayed. The installation will automatically change the efficiency value of the selected unit.

15.8 Autoadjustment of a dead time of the remote bdza-96 detecting unit

Pass in a setup mode of the monitoring installation, according to item 15.1.

The detecting unit "ALFA" is selected by clicking the "Selection" button in the "Unit" field.

Select the “CP2” parameter by clicking the "Selection" button in the "Parameter" field. In the "Value" field a flux density value of the source against which the UD was adjusted during the previous calibration will appear as "XXXX".

Set a flux density value within 5000-9000 $min^{-1}cm^{-2}$, corresponding to the selected UD, using the "←", "↑", "→" buttons, and press the “Enter” button in the "Parameter" field for its storage.

Arrange the unit on a source of the 5П9 type with a flux density of 5000 - 9000 min^{1} cm^{-2}.

Press the “Test” button in the “Result” field. The installation will pass in the measurement mode with the selected detecting unit. With this, the "----" message will appear in the “Result” field for 20 seconds, and then the measured value as "XXXX", which should coincide with this set in the "Value" field, will be displayed. The installation will automatically change the dead time value of the selected unit, but the efficiency value will not change.

15.9 Manual correction of efficiency and dead time of detecting units

The manual correction of efficiency and dead time of detecting units is available only for the remote BDZA-96 unit and detecting units of the installation in the mode of measurement of Sr90-Y-90 («n0»).

Manual correction of parameters can be made at absence of calibration plates of the required ratings for performing an auto adjustment of efficiency and dead time of detecting units, and also if required to introduce corrections into their values to compensate the effect of design additions, etc.

To correct efficiency or dead time, select the desired unit by clicking the "Selection" button in the "Unit" field and the "EFF" or "tAU" parameter, accordingly, by clicking the "Selection" button in the "Parameter" field.

Then, using buttons "←", "↑", "→", change a parameter value, and press "Enter" in the "Parameter" field , to store a new value.

15.10 setting the installation to mode of registration on other type nuclides

Pass in a setup mode of the monitoring installation, according to item 15.1.

The unit is selected by clicking the "Selection" button in the "Unit" field (d1-d6). Select the required nuclide using the “Nuclide” button (on the indicator in the"Unit" field after the unit number the «n0» - «n9» message is displayed).

All the detecting units will automatically pass in the mode of measurement on this nuclide.

15.11 Setup and correction of factor ξ

By its physical meaning the factor ξ is a ratio of registration efficiency of β-radiation of the detecting unit for the selected nuclide and registration efficiency of β-radiation of the unit for detecting Sr90-Y90 in percentage.

Factors ξ are stored in a nonvolatile memory of detecting units by the manufacturer, and their change is not allowed except situations connected with repair of detecting units and change for a different measured nuclide not introduced into the logbook of the device.

If that is the case when the change (restoring) of the factor ξ is required, perform the following steps:

- determine the factor ξ according to the techniques described in Appendix A;
- select the desired nuclide according to item15.10;
- select the «EFFn» parameter by clicking the «Selection» button in the «Parameter» field;
- enter the value of factor ξ for this nuclide, using the «←», «↑», «→» buttons. To store the value after changing, press “Enter” in the “Parameter” field. Then the previous value of the factor ξ in the “Value” field will change for the new one.

15.12 Exit from setup mode of the monitoring installation

To exit from a setup mode of the monitoring installation, press the "Mode" button ("Unit" field) and after then turn a key of access located on a back panel of the unit "Arms".

16 POSSIBLE FAULTS AND WAYS OF THEIR REMOVAL

16.1 A list of possible faults and the ways of their removal is given in Table 7.

Table 7

Name of fault	Possible reason	Ways of removal	Note
1. The light emitting diodes of indicator panel are dim when turning the device on	There is no power supply	Check a fuse and a proper connection to AC mains	
2. When turning the device on, the «ErXY» message is displayed	Fault in one of the units of the monitoring installation	See instruction on adjustment	X- the unit number Y- error code See Table 8 for details
3. Strong difference of measurement results from rating values of the test plate	Miscalibration of units	Repeat calibration of the detector	
4. When removing the remote units, there is no transition to the «ALFA» or «bEtA» mode	The end sensor of the appropriate unit is defective	Check mobility of a tail of the end sensor	
5. The measurement process does not start when all six photosensors are locked	One of photosensors is defective	Check the operation of photosensors in a setup mode (see 15.2)	

16.2 The list of faults of the monitoring installation units displayed as "ErXY", is given in Table 8.

Table 8

Value X	Value Y	Fault
1 … 7	0	UD № X is absent
1 … 7	1	In UD № X the Beta – 2 counter №1 is faulty
1 … 7	2	In UD № X the Beta-2 counter №2 is faulty
1 … 7	3	In UD № X the Beta-2 counter №3 is faulty
1 … 7	4	In UD № X the Beta-2 counter №4 is faulty
1 … 7	5	In UD № X the Beta-2 counter №5 is faulty
1 … 7	6	In UD № X the Beta-2 counter №6 is faulty
1 … 7	7	In UD № X the high-voltage source is faulty
1 … 7	8	Contamination or excessive background of the UD №X
1 … 7	9	Photosensor of the UD № X is faulty
8	0…9	CPD or DU is faulty
9	0	BDZA-96 is faulty

17 MAINTENANCE

17.1 Maintenance is carried out with the purpose of ensuring the proper and continuous operation of the monitoring installation. The following main kinds and terms of preventive operations are recommended:

- Visual inspection 1 time per month;
- External cleaning 1 time per month;
- Check of main parameters 1 time per year.

17.2 When performing maintenance, the safety measures stated in section 8 of this Technical Description should be observed.

17.3 When performing a visual inspection, the conformity of the installation to the requirements for a complete set and marking is checked.

At visual inspection of an external condition it is necessary to check fixation of units, accuracy of fixation of remote units, reliability of connecting AC cable and leads of the BDZA-96 unit, condition of varnish and galvanic coatings.

17.4 External cleaning is carried out, to avoid contamination of the installation. The dust outside is withdrawn using a soft cloth or brush.

17.5 Check of main parameters is carried out according to the technique described in sections 13 and 14 of this Technical Description.

18 STORAGE RULES

18.1 The monitoring installation should be stored under conditions eliminating a capability of mechanical damages, in ventilated dry and clean rooms.

18.2 The transport packaging of the installation provides full safety within 6 months under conditions indicated in item 18.1 of this Technical Description.

18.3 The installation coming to storehouse of a customer and intended for a long-term storage of more than 6 months, should be subjected to conservation.

18.4 The conservation of the installation should be made by putting it in a film cover with silica gel.

19 TRANSPORTATION

19.1 The transportation of the monitoring installations can is made by any kind of a transport at any distances in packaging of enterprise-manufacturer at observing the following rules:

- railway coaches, containers, the bodies of automobiles, used for transportation of the installations, should not have tracks of transportation of cement, coal, chemicals etc.;
- the boxes with the installations should be covered by a canvas at transportation by an opened motor transport;
- the boxes with the installations should be located in a heated pressurized section at transportation by air transport;
- the boxes with the installations should be located in hold at transportation by water transport.

19.2 Arrangement and fastening of boxes should provide a steady position throughout the entire journey, absence of displacement and shocks each other.

19.3 At loading and unloading of the installations it is necessary to observe requirements of inscriptions indicated on tare .

APPENDIX A

DETEREMINATION TECHNIQUE OF FACTOR ξ FOR THE DETECTING UNIT

A.1 The monitoring installation is prepared for operation and switched on according to the item 10.

Overlap an optical axis of the sensor of object presence of the selected UD.

Arrange a source 1CO with a flux density of 6000-12000 $min^{-1}cm^{-2}$ in middle of one of 12 windows of a protective grating of the selected detecting unit.

Make three measurements according to item 11.7. The obtained results should be recorded.

Repeat this procedure for all the other windows of a protective grating of the selected UD.

Calculate average of the measured value on 36 measurements (X_1).

A.2 Arrange a source 1TL with a flux density of 6000-12000 $min^{-1}cm^{-2}$ in middle of one of 12 windows of a protective grating of the selected detecting unit. Similarly make the measurements. Calculate average of the measured value on 36 measurements (X_2).

Determine a factor ξ by the formula

$$\xi = \frac{X_2 / P_2}{X_1 / P_1} \qquad (A.1)$$

where X_1 - is average of the measured value on 36 measurements for a source 1CO;

X_2 - is average of the measured value on 36 measurements for a source 1TL;

P_1 - is a passport value of a flux density for a source 1CO ($min^{-1}cm^{-2}$);

P_2 - is a passport value of a flux density for a source 1TL ($min^{-1}cm^{-2}$).

A.3 Determination of ξ for other nuclides is the same.

APPENDIX B

TYPICAL DEPENDANCE OF SENITIVITY OF THE MONITORING INSTALLATION ON MAXIMUM ENERGY OF β-RADIATION SPECTRUM

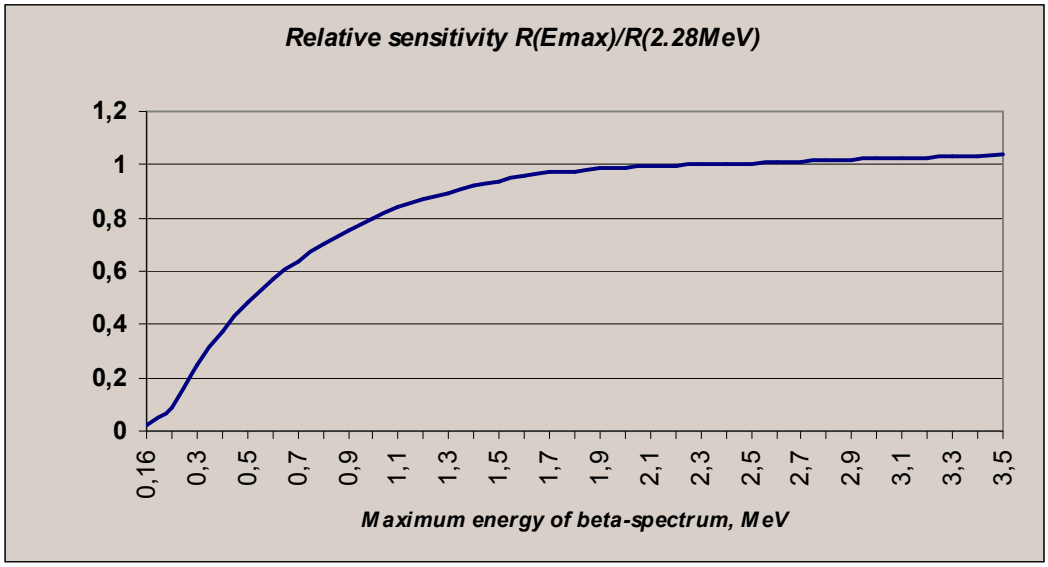

APPENDIX C

ASSEMBLY UNSTRUCTIONS

C.1 Put the cable from the “Legs” unit through the hole in the rack.

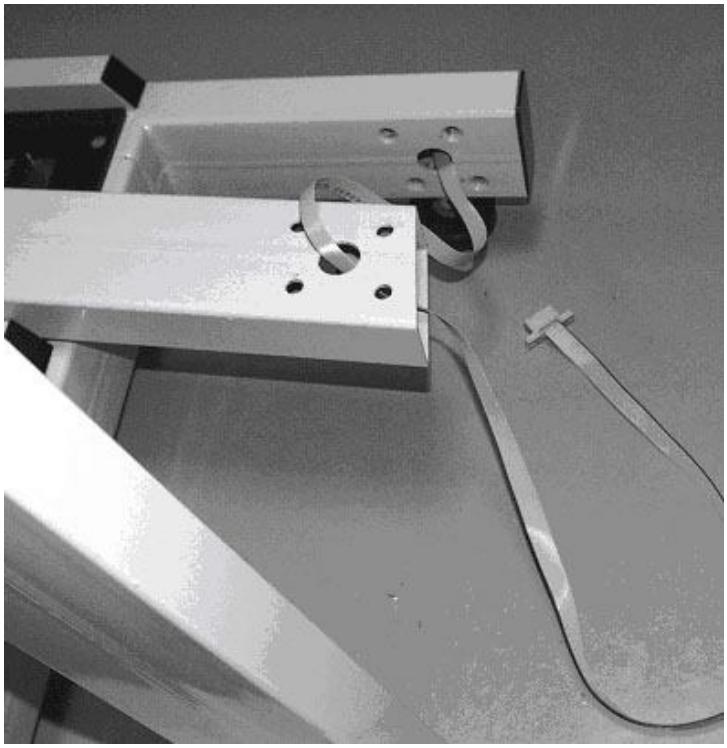

C.2 Fasten the rack on the “Legs” unit and pass the cable inside the rack.

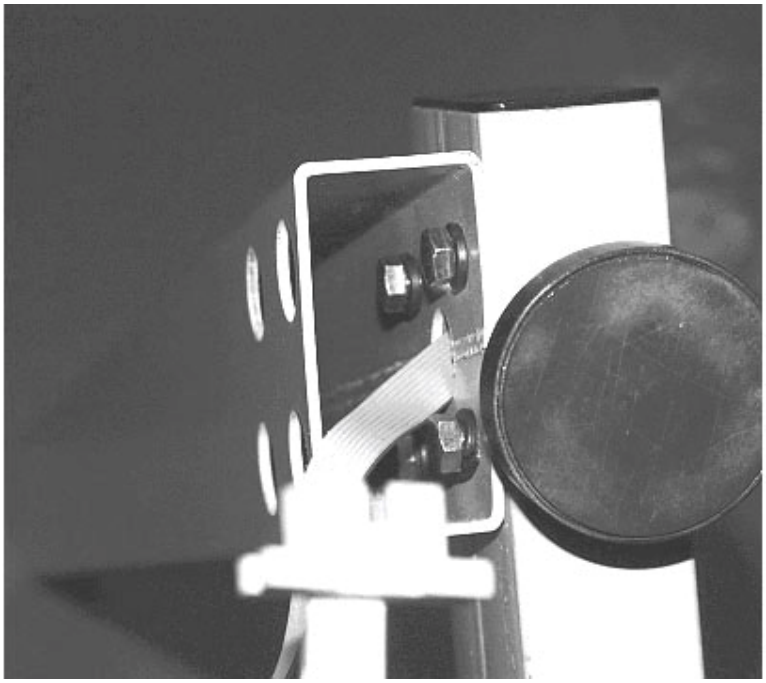

C.3 Fasten the connector at the top of the rack.

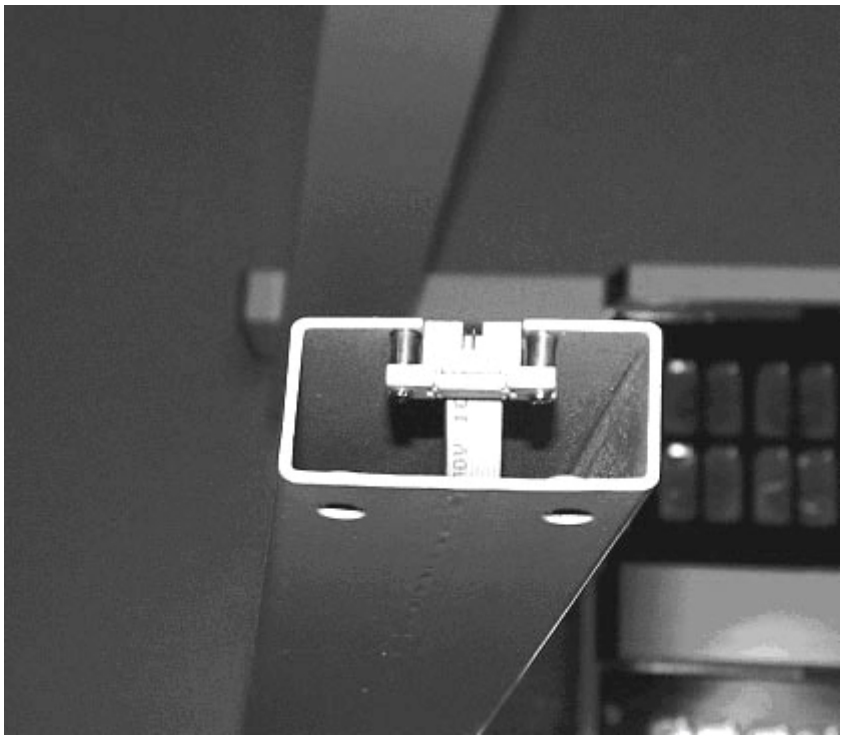

C.4 Arrange the “Arms” unit on the rack.

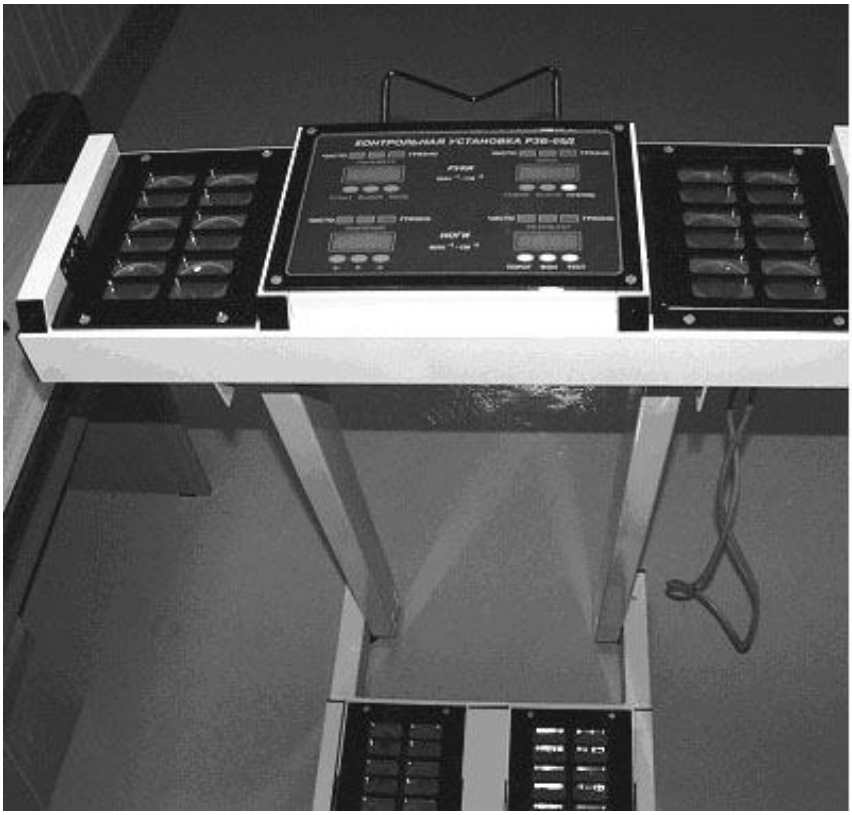

C.5 Fasten the “Arms” unit to the rack using four screws.