436210
ОКП

**SIENTIFIC AND PRODUCTION COMPANY**
**“DOZA”**

FOR NPP

# PERSONAL GAMMA RADIATION DOSIMETER
# ДКГ-05Д

Operation manual

ФВКМ.412113.005РЭ

Table of contents

The present Operation Manual contains information on the design, operational principle, technical specifications and instructions necessary for the proper application and safety operation of the product (intended use, maintenance, routine repairs, storage, and transportation), as well as information on decommissioning of the product.

## 1 DOSIMETER DESCRIPTION AND OPERATION

### *1.1 Purpose of the dosimeter*

The personal gamma radiation dosimeter ДКГ-05Д ФВКМ.412113.005 (thereafter, dosimeter) is produces in accordance with the requirements of ТУ 4362-010-31867313-01.

The dosimeter is used both with the УС-05С reader and КЗУ-27 cassette charger and independently (for routine, operational, and accidental monitoring of individual doses) as well as a part of the computer-aided dosimetry monitoring system at facilities and organizations, when handling ionizing radiation sources, including nuclear-powered vessels.

The dosimeter is designed to wear it on the personnel clothes. The dosimeter is intended to measure the personal gamma radiation dose equivalent $H_p(10)$ and rate of personal gamma radiation dose equivalent $\dot{H}_p(10)$.

### *1.2 Technical specifications*

1.2.1 Measured energy range .....0.05 to 3.0 MeV.

1.2.2 $H_p(10)$ measurement range .....$1\cdot10^{-7}$ to 15 Sv.

1.2.3 Rate of $\dot{H}_p(10)$ measurement range .....$1\cdot10^{-6}$ to 10 Sv/h.

1.2.4 Relative measurement error no more than:

- Rate of $\dot{H}_p(10)$ ..... ± [15 + 60/$\dot{H}_p(10)$ μSv/h] %;
- $H_p(10)$ ..... ± [15 + 20/$H_p(10)$ μSv] %.

1.2.5 Energy dependence of sensitivity .....no more than ±30 %

1.2.6 Anisotropy of dosimeter sensitivity within 180° solid angle for Cs-137 radiation (0.662 MeV) .....no more than ±35 %

1.2.7 Operation mode installation time .....no more than 5 min

1.2.8 Continuous operation time .....no less than 100 h without accumulator battery re-charge.

1.2.9 Dosimeter reading instability during 8 h of continuous operation is no more than 5 %

1.2.10 Rate of $\dot{H}_p(10)$ measurement time is selected automatically depending upon dose rate value:

| Subrange: | Measurement time: |
|---|---|
| - 1 to 7,5 μSv/h ..... | 255 s; |
| - 7,5 to 15 μSv/h ..... | 256-128 s; |
| - 15 to 30 μSv/h ..... | 128-64 s; |
| - 30 to 60 μSv/h ..... | 64-32 s; |
| - 60 to 120 μSv/h ..... | 32-16 s; |
| - 120 to 240 μSv/h..... | 16-8 s; |
| - 0,24 to 0,48 mSv/h..... | 8-4 s; |
| - 0,48 to 0,96 mSv/h..... | 4-2 s; |
| - 0,96 to 2 mSv/h..... | 2-1 s; |
| - above 2 mSv/h ..... | 1 s. |

1.2.11 Sound and light alarm signals would be switched on:

- in case of accumulator battery voltage below 3,52 V;

- in case of indication limit exceeding above 42,9 Sv for $H_p(10)$ and 42,9 Sv/h for rate of $\dot{H}_p(10)$
- in case of exceeding the systemic alarm thresholds;
- in case of exceeding of a subrange limits.

1.2.11.1 Sound alarm parameters:

- sound signal frequency in the range of ..... 1000 to 3000 Hz;
- sound pressure level:
  - at 40 cm distance from the ear ..... no less than 80 dB;
  - at 30 cm distance from the ear ..... no more than 100 dB;

1.2.12 The dosimeter provides automated recording of $H_p(10)$ and rate of $\dot{H}_p(10)$ into its memory at the fixed time periods. The maximal number of records should not be less than 1900. Time period of archive records is established as follows:

- with 1 second step for periods of 1 to 60 seconds;
- with 1 minute step for periods of 1 minute to 1 hour;
- with 1 hour step for periods of 1 hour to 18 hours.

1.2.13 In case of the uncharged (absent) accumulator batteries, the information recorded in the nonvolatile dosimeter memory would be preserved for 5 years at least.

1.2.14 Electric power supply is provided:

- for the dosimeter – by three accumulator batteries of no less than 280 mA/h capacity each with the total supply voltage of no more than 4.2 V;
- for УС-05С, КЗУ-27 – by AC single phase mains of $220^{+22}_{-33}$ V and $50^{+2,5}_{-2,5}$ Hz frequency.

1.2.15 КЗУ-27 provides full dosimeter battery charge within…….no more than 12 hours.

1.2.16 Electric power consumed by the dosimeter together with УС-05С and КЗУ-27 is no more than 50 VA.

1.2.17 The climatic design is ТН3 for the dosimeter and ТН4.1 for УС-05С and КЗУ-27 on ГОСТ 15150-69.

1.2.18 Margins for external climatic factors on ГОСТ 15150-69 for the dosimeter, УС-05С and КЗУ-27 in operation are as follows:

- working temperatures:
  for the dosimeter …….…….. minus 20 to +50 °C
  for УС-05С and КЗУ-27 …….……..…….. 0 to +45 °C
- maximal relative humidity……... up to 98 % at +35 °C
- atmospheric pressure……... 86,6 to 106,7 kPa
- concentration of corrosion-active agents corresponds to atmosphere type III, the outdoors concentration of corrosion-active agents is as follows:

| Substances | Concentration, mg/m$^3$ | Deposition velocity, cm/s | Deposition flow, mg/(m$^2$·day), |
|---|---|---|---|
| Chlorides | 0.0212 | 0.1 | 1.83 |
| Sulphates | 0.58 | 0.1 | 50 |
| Sulfurous gas | 0.006 | 0.9 | 4.7 |
| Nitric oxides | 0.004 | - | - |

For УС-05С and КЗУ-27 the concentration of corrosion-active agents is allowed to be equal to 60 % of the specified values.

1.2.19 The dosimeter, УС-05С and КЗУ-27 are resistible to impact of sinusoidal vibration of frequency ranges:

- 2 to 13,2 Hz with 1 mm shift amplitude,
- 13,2 to 80 Hz with 0.7 g acceleration.

1.2.20 УС-05С and КЗУ-27 are resistible to shocks impact with 5,0 g acceleration and frequency within 40 to 80 times per minute; total number of shocks is no less than 1000.

1.2.21 The dosimeter is resistible to shocks impact in case of the free falling from the height of no more than 750 mm on wooden floor for:

- falling on edges..... 6 times;
- falling on crossbars..... 3 times;
- falling on angles ..... 2 times.

1.2.22 On seismic stability, the dosimeter, УС-05С and КЗУ-27 correspond to the requirements of РД 25 818-87 and НП-031-01 for seismic impact of up to grade 7 of the MKS-64 scale at 30 m height above the ground.

1.2.23 The casing protection degree on ГОСТ 14254-96:

- for the dosimeter …… IP65;
- for УС-05С …… IP23;
- for КЗУ-27 …..... IP53.

1.2.24 The dosimeter is related to the safety elements of class 4N according to ОПБ-88/97.

1.2.25 On electromagnetic compliance, the dosimeter, УС-05С and КЗУ-27 are related to the normal operation elements important for the safety on group III; the function quality criterion A on ГОСТ Р 50746-2000.

The impact of electromagnetic interference does not result in false operation and restart of the dosimeter, УС-05С, and КЗУ-27.

1.2.26 The dosimeter in $H_p(10)$ or rate of $\dot{H}_p(10)$ measurement mode withstands the short time exposure to 20 Sv/h ambient dose equivalent rate for 5 minutes. At that after 10 minutes of exposure the dosimeter keeps its main relative error of measurement within the margins specified in 1.2.4.

1.2.27 The electric shock protection degree is class III on ГОСТ 12.2.007.0 for the dosimeter and class I on ГОСТ 12.2.007.0 for УС-05С and КЗУ-27.

1.2.28 On fire protection properties, the dosimeter, УС-05С and КЗУ-27 correspond to ГОСТ 12.1.004 with fire incidence probability of less than $10^{-6}$ 1/year.

1.2.29 The dosimeter, УС-05С and КЗУ-27 are resistible to decontamination agents:

- boric acid ($H_3BO_3$) – 16 g, sodium tiosulfate ($Na_2S_2O_3 \cdot 5H_2O$) – 10 g, distilled water – up to 1 L;
- trisodiumphosphate or sodium hexametaphosphate – 10-20 g/L in water (any synthetic detergents);
- 5 % lemon acid solution in ethyl alcohol – for the internal surfaces of electronic components.

1.2.30 Mass is no more than for:

- the dosimeter including accumulator batteries …… 0,1 kg;
- УС-05С with 1 m length interface cable ……..…….. 7,0 kg;
- КЗУ-27 with 1.5 m length interface cable ……..……..……. 7,2 kg.

1.2.31 Overall dimensions are no more than for:

- dosimeter..... 96×47×30 mm;
- УС-05С..... 310×250×118 mm;
- КЗУ-27..... 650×200×88 mm.

**1.3 Dosimeter components**

The dosimeter is a miniature direct reading device with the hermetic casing made of shock-resistant plastic.

The inner side of the dosimeter has the clip to fix it on the operator chest pocket.

The dosimeter is used in the complex with УС-05С reader and КЗУ-27 cassette charger.

Overall and connection dimensions of the dosimeter, УС-05С, and КЗУ-27 are given in Annex C.

**1.4 Dosimeter design and operation**

1.4.1 Two silicon detectors are used for the radiation detection (rough and fine ones). Detectors are switched of in a sequence depending upon the measured radiation dose rate. The ionizing radiation flow is transformed into electric pulses in the detector.

Dosimeter operation is controlled by the microprocessor responsible for different functions including the transformation of electric pulses into rate of $H_p(10)$ and $\dot{H}_p(10)$ values, self-test functions, functions of data accumulation and storage for rate of $H_p(10)$ and $\dot{H}_p(10)$ measurements, data exchange with PC, accumulator battery charge control etc. measurement result is displayed in the indicator.

General view of the dosimeter is shown by Figure 1.1:

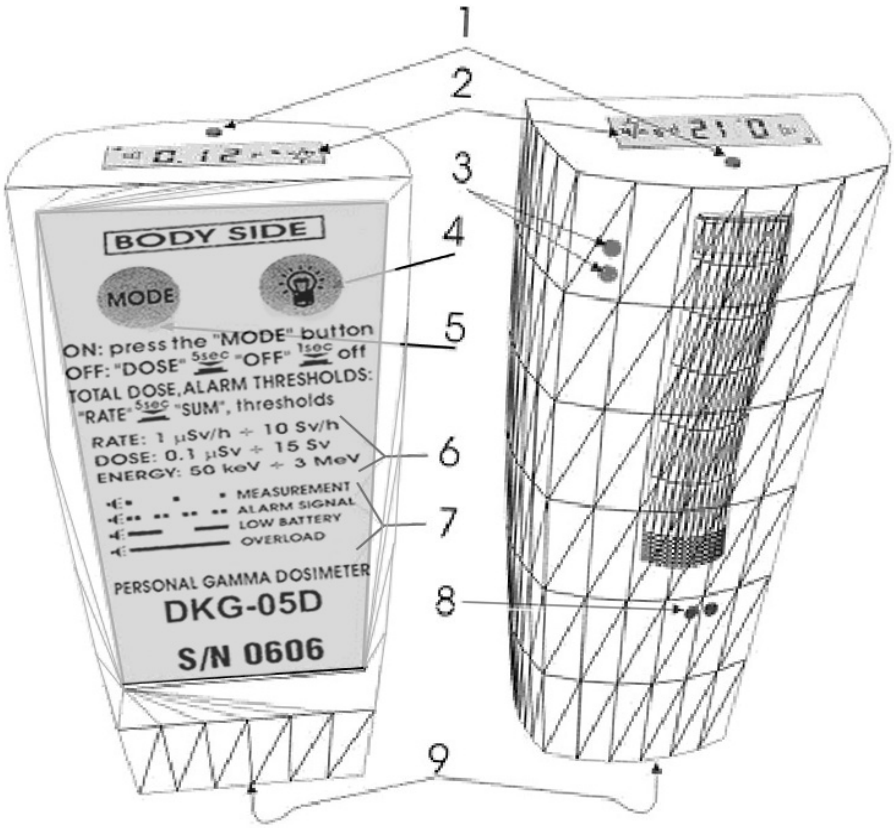


Figure 1.1 — General view of dosimeter

1) red light diode – doubling of sound signals in case of alarm or operation mode change;

2) combined LCD indicator;

3) sound signal source to provide sounds in case of operation mode change, rate of $H_p(10)$ and $\dot{H}_p(10)$ threshold excess and battery discharge;

4) indicator light button;

5) MODE button to switch on/off the power and to change the following dosimeter

operational modes:

- rate of $\dot{H}_p(10)$ measurement;
- measurement of single $H_p(10)$ accumulated from the time of the last switching on;
- cumulated $H_p(10)$ measurement;

6) ranges of measured values;

7) list of light and sound signals given at dosimeter operation (operator reference);

8) entrance IR window for PC connection via reading device to preset systemic alarm thresholds for rate of $H_p(10)$ and $\dot{H}_p(10)$, to read measurement results and to adjust/ re-adjust dosimeter operation;

9) contacts of accumulator battery placed on the lower side of the casing.

1.4.2 The dosimeter provides *operational individual monitoring of personnel and sound and light alarming* in case of the rate of $H_p(10)$ and $\dot{H}_p(10)$ preset thresholds exceeding.

*Operational individual monitoring* of dose consumption for personnel of nuclear industry enterprises and others concerned with operation of power reactor facilities, handling, processing, and transportation of production containing radioactive materials. The dosimeters may be applied in medicine for radiotherapy and diagnostics as well as used by environmental, sanitary, and customs service.

ATTENTION! THE DEVICE SIDE WITHOUT CLIP HAS TO BE PLACED TO THE BODY DIRECTION.

The dosimeter presumes the setting of two levels of $H_p(10)$ thresholds: preventive and accidental presets, which exceeding is dosimeter user distinguished according to the character of the sound signal. If the preventive $H_p(10)$ preset is exceeded, doubled short (100 ms each) *sound tone signals* would occur, whereas the accidental $H_p(10)$ preset or rate of $\dot{H}_p(10)$ threshold are exceeded, tone signals have 250 ms duration each.

Alarm signal occurred in case of the exceeding any threshold would be automatically terminated, if the new rate of $\dot{H}_p(10)$ measured current value is below the threshold value of the alarm preset. This function provides user to automatically stop the alarm signal, if he/she has left the radiation field of dangerous (threshold) rate of $\dot{H}_p(10)$ level. It should be reminded, that $H_p(10)$ and rate of $\dot{H}_p(10)$ measurements are always simultaneous and the display is automatically re-switched to the mode of indication of the exceeded value.

Values of factory settings of *sound and light alarming are as follows:*

- $H_p(10)$ preventive threshold 15 mSv;
- $H_p(10)$ accidental threshold 20 mSv;
- if measured $H_p(10)$ value is above 42,9 Sv, the continuous alarm of 6 seconds duration would be switched on to signalize $H_p(10)$ indication limit excess; in such case maximal possible value of 42,9 Sv would be indicated;
- preventive rate of $\dot{H}_p(10)$ threshold which switches off the alarm is set 1 μSv/h;
- rate of $\dot{H}_p(10)$ accidental threshold is 12 μSv/h;

- if measured rate of $\dot{H}_p(10)$ value is above 42.9 μSv/h, the continuous alarm of 6 seconds duration would be switched on to signalize rate of $\dot{H}_p(10)$ indication limit excess; in such case maximal possible value of 42.9 Sv/h would be indicated;
- when the accumulator battery voltage is below 3,52 V, the blinking battery symbol would be indicated to prevent that the dosimeter will be automatically switched off in few hours because of the complete power discharge; in such case 2 second sound signal would be given each 15 minutes. In case of 3,3 V battery voltage, the switching off signal will be given and the dosimeter will be automatically switched off with the preservation of accumulated information in the memory. In case of dosimeter operation under negative outside temperature around minus 20 °C, the battery discharge symbol can be also indicated for almost charged battery. In such case the automated switching off will occur after 24 hours of continuous operation at least.

Rate of $\dot{H}_p(10)$ measurement time is 1 to 255 s. The time of indication renewal is automatically increased for the decreasing dose rate. Each sequential calculation of rate of $\dot{H}_p(10)$ value is accompanied by sound signal of 60 ms duration.

Dosimeter power supply is provided by three accumulator batteries of no less than 280 mA/h capacity each with the total supply voltage of less than 4,2 V. Continuous operation without battery charge is 100 hors for routine operation of the sound signal: less than 1 sound signal of measurement per minute. Battery charge is provided by КЗУ-27 charger included in the shipment set.

For dosimeter operation in the dosimetry monitoring system together with PC, the data transmission is arranged via УС-05С.

**1.5 Marking and sealing**

1.5.1 Following marks are placed on the casings of dosimeter components:
- trade mark or name of the manufacturer;
- conditional sign of item: item type and unit;
- sequential number of item according to the manufacturer;
- year of production;
- approval sign of measuring instrument pattern (only for the dosimeter);
- power, voltage/current and electric power frequency;
- protection degree on ГОСТ 14254-96.

1.5.2 The place and technology of marking and font size agree to requirements specified in design documentation.

1.5.3 The dosimeter, УС-05С and КЗУ-27 must be sealed according to design documentation.

**1.6 Packing**

1.6.1 Dosimeter packing should be done according to the requirements of category КУ-3 on ГОСТ 23170-78.

1.6.2 Inner package of the dosimeter, УС-05С and КЗУ-27 should correspond to the requirements of ГОСТ 9.014-78 for group III of ВЗ-10 protection type, ВУ-5 package variant. Protection term without re-conservation is 3 years.

1.6.3 Packing should be carried out indoors in the ventilated rooms under the air temperature of +15 to +40 °C, relative air humidity of up to 80 % at +20 °C, and air concentration of corrosion agents according to type I on ГОСТ 15150-69.

## 2 INTENDED USE

### 2.1 Operational limits

2.1.1 The dosimeter keeps its operational abilities under conditions given by 1.2.

### 2.2 Preparation for operation

*2.2.1 Dosimeter switching on/off*

2.2.1.1 Dosimeter switching on is done by single push of the button MODE. After switching on, the dosimeter will start self-testing mode, when whole electric circuits of the dosimeter are tested including indicator and detectors. In case of electric circuit failure the message **E-(01, 02, 04, 05)** would be indicated and the dosimeter will be automatically switched off. It will also switch off with the sound signal, if the battery power voltage is below 3,3 V. If the power voltage is below 3,52 V, the dosimeter will switch on, but the preventive sound of 3 s duration will occur and battery discharge symbol will be indicated. Such signal will be always given, if the voltage is below 3,6 V during the operation.

It should be noted, that if the short time (less than 1 s) push is done when switching on the dosimeter, indicator and battery test results will be indicated; the longer push will result to exclusion of these indications to save time for operational mode start.

During dosimeter self-testing, sound and light signals will be given (red light diode glow) as well as all segments and symbols of the indicator to give the opportunity of indicator, sound and light workability visualization. At the end of the self-testing battery voltage is displayed and the dosimeter enters to operational measurement mode.

2.2.1.2 Dosimeter switching off is done as follows.

Under dose indication mode, to push and keep the button MODE until second sound signal. To release the button after the second sound. OFF reading will be indicated. Within next 5 s the button should be pressed and released. The dosimeter will be switched off with long sound. If the button is not pressed within 5 seconds after OFF indication, the indication will continue to indicate dose. The consumed electric current under switched on state does not exceed the self-discharge current of the accumulator battery.

### 2.3 Intended use

*2.3.1 Choice of operational mode*

The dosimeter is operated in any of three measurement modes with direct indication of measurement results:

- measurement of rate of personal gamma radiation dose equivalent $\dot{H}_p(10)$;
- measurement of single personal gamma radiation dose equivalent $H_p(10)$; the automated EPROM recording is carried out for the accumulated dose at specific time intervals;
- measurement of cumulated personal gamma radiation dose equivalent $H_p(10)$.

Mode selection and other operations are carried out by the button MODE push. The command execution is confirmed by the sound. Radiation danger symbol blinking indicated to the measurement in progress.

Under **TOTAL DOSE** mode, the dose accumulated within the whole operational time or from the moment of last erasure (if any) will be indicated.

To call cumulated dose to the indicator, the button should be pressed until the second sound under dose rate measurement mode. After the sound, the button should be released and the message SUM (value of cumulated dose) will be indicated. Upon 3 s the indicator will be back automatically to the rate of $\dot{H}_p(10)$ mode indication.

*2.3.2 Dosimeter operation description in the complex with УС-05С reading device*

2.3.2.1 The УС-05С reader is able to transmit data to the information communication channels and provides the access to the processed information via communication lines arranged according to TCP/IP protocol (Ethernet interface).

The description of operation of the reading device УС-05С is in operation manual ФВКМ.467669.002РЭ.

*2.3.3 Dosimeter operation description in the complex with КЗУ-27 cassette charger*

2.3.3.1 As already mentioned in 2.2.1, if the power voltage is below 3,52 V, the preventive sound of 3 s duration, which signal will be repeated each 15 min of the operation and the battery discharge symbol will be indicated.

**ATTENTION!** IN SUCH CASE, IT IS NECESSARY TO CHARGE THE ACCUMULATOR BATTERY, BECAUSE THE DOSIMETER WILL BE AUTOMATICALLY SWITCHED OFF IN SEVERAL HOURS OF OPERATION, WHEN THE VOLTAGE WILL DECREASE TO 3,3 V.

2.3.3.2 The switching on the device will be only possible after the battery charge.

The accumulator battery charging is provided by КЗУ-27 charger. КЗУ-27 is able to charge 27 dosimeters simultaneously.

КЗУ-27 is the steel made casing fixed on the wall and it contains 220 V AC power supply and 27 contact sets connected in parallel to the power supply output. To charge the battery, КЗУ-27 has to be connected to 220 V mains and the dosimeter has to be fixed in КЗУ-27 contact set. Dosimeter indicator will show the battery voltage and red light diode will operate.

2.3.3.3 Charging process is arranged as follows. Immediately after 5 V application to the charging contact set placed in the dosimeter casing, the processor will stop the measurement and connect the load resistor to the battery poles, where 100 mA current will be applied for 3 s. Upon 3 s under the load, the battery voltage is measured. If the measured voltage is above 3,52 V, the forced discharge will be stopped and time-unlimited will be at most 15 mA current charging will be started. In such case, the battery is considered to be normally charged and the dosimeter can be operated at any time. If the measured voltage is below or equal to 3,52 V, the forced discharge will be continued until the voltage decrease to 3.3 V. thereafter, the normal charging by 90 to 100 mA will be initiated for 12 hours. Three variants of charging light indication are present:

- In case of forced discharge the light diode blinks with 2 Hz frequency,
- Under normal charging by 90 to 100 mA the light diode blinks with 1 Hz frequency,
- Under permanent charging by 15 mA (storage mode) the light diode is permanently illuminated.

## 3 MAINTENANCE

### 3.1 General

3.1.1 Dosimeter maintenance implies periodical visual examination for the purpose of absence of damages and check of operability according to 2.2. No additional requirements to personnel qualification and workplaces are needed.

3.1.2 Basic parameters are checked according to the procedure in section 4.

### 3.2 Safety measures

3.2.1 The present operation manual should be learnt before dosimeter operation.

3.2.2 When operating the dosimeter, Basic Sanitary Rules of Radiation Safety СП 2.6.1.799-99 (ОСПОРБ-99) and Radiation Safety Standards СП 2.6.1.758-99 (НРБ-99) should be kept.

## 4 VERIFICATION

### *4.1 General*

4.1 Dosimeter verification is performed by the State metrology service or other authorized organizations certified for the right of metrological testing. Requirements to verification organization, procedure and result recording are established by Measuring Instrument Verification. Organization and procedures ПР 50.2.006-94.

All new manufactured and repaired dosimeters as well as dosimeters in operation are subjected to verification.

Initial calibration should be performed after production and repair of dosimeters.

Periodical verification is carried out for dosimeters in operation once in a year.

### 4.2 Operations and verification equipment

Operations and equipment shown in Table 4.1 should be used while verification tests.

Table 4.1 – Operations and equipment for verification

| Operation | No. of item | Verification equipment and their reference technical specifications | Obligatory for | |
|---|---|---|---|---|
| | | | Primary calibration | Periodical verification |
| 1. Visual examination | 4.5.1 | Visually | Yes | Yes |
| 2. Test | 4.5.2 | | Yes | Yes |
| 3. Assessment of $H_p(10)$ and $\dot{H}_p(10)$ measurement relative error | 4.5.3 | Verification installation УПГД-1М or similar with $^{137}$Cs sources, which provides exposure to $\dot{H}_p(10)$ within: 0,1 to mSv/h with the error of no more than 5 %. Chronometer С1-2а ТУ 25-1 819.0027-90. Phantom: - cube 30×30×30 cm, tissue equivalent substance | Yes | Yes |
| 4. Results recording | 4.6 | | Yes | Yes |
| Note – It is permitted to use verification means and equipment newly elaborated or in operation, which are similar or better than these shown in the present verification technique. | | | | |

### 4.3 Safety requirements

When conducting verification, safety requirements of 3.2 and given in documentation on applied verification means and equipment are obligatory.

### 4.4 Conditions

Verification should be carried out under the following conditions:

- Ambient air temperature ..... +20 ±5°C;
- Relative air humidity ..... from 30 to 80 %;
- Atmospheric pressure ..... from 86 to 106,7 kPa;
- Natural radiation background..... no more than 0,2 μSv/h.

### 4.5 Procedure

*4.5.1 Visual examination*

Visual examination one should check:

- correspondence of the dosimeter set;
- operational documentation presence;
- absence of defects affecting on dosimeter operation;
- presence of previous verification marks.

*4.5.2 Testing*

Dosimeter testing is done according to 2.2.1 operations.

*4.5.3 Assessment of relative* $H_p(10)$ (rate of $\dot{H}_p(10)$ *measurement error*

4.5.3.1 For verification to be performed, the УДГП-1М type installation or similar device which is certified for $\dot{H}_p(10)$ rate of gamma radiation within the error of 5 % in the ranges of 0,1 to 100 mSv/h and 100 to 3000 mSv/h with $^{137}$Cs sources should be used.

Notes

1 To protect the operator caring out verification against the overexposure, information is read using remote video camera or other optical device (for example, binoculars) to exclude the operator exposure to radiation field of the source.

2 Verification test is not performed in the whole range of $H_p(10)$, it is warranted by positive results of verification test in two points and rate of $\dot{H}_p(10)$ in the whole measurement range.

4.5.3.2 Place the phantom on the verification installation so that the phantom plane is perpendicular to radiation incidence.

When measuring, the dosimeter should be closely placed on the phantom side faced to the radiation source. The dosimeter clip should be faced to the radiation source and the detector center (its projection is marked in the casing – see Annex A) should be on the line which connects the radiation source with the phantom surface center.

4.5.3.3 Perform rate of $H_p(10)$ and $\dot{H}_p(10)$ measurements according 2.2 and 2.3.

4.5.3.4 Relative error assessment under rate of $\dot{H}_p(10)$ measurement mode should be done for rate of $\dot{H}_p(10)$ values of 0.1, 50, 500, 3000 mSv/h.

4.5.3.5 Relative error assessment under $H_p(10)$ measurement mode should be done for $\dot{H}_p(10)$ values of 0,4-0,5 mSv/h and 1-1,2 Sv/h. Exposure time should not be less than 200 s.

4.5.3.6 At least, five rate of $\dot{H}_p(10)$ measurements should be done, $\dot{H}_p(10)_i$ for each conditionally true value of rate of $\dot{H}_p(10)_{oi}$, according to 4.5.3.4 and $H_p(10)$ for conditionally true value of dose, $\dot{H}_p(10)_{oi}$, according to 4.5.3.5 and average values of measured parameters should be calculated.

4.5.3.7 Minimal and maximal measured values of rate of $H_p(10)$ and $\dot{H}_p(10)$ should be determined.

4.5.3.8 Calculate relative differences (%) by following formulae:

$$\delta_{\dot{H}} = 100 \cdot [\dot{H}_p(10)_{oi} - \dot{H}_p(10)_{i\min}] / \dot{H}_p(10)_{oi} \quad (4.1)$$

$$\delta_{\dot{H}} = 100 \cdot [\dot{H}_p(10)_{oi} - \dot{H}_p(10)_{i\max}] / \dot{H}_p(10)_{oi} \quad (4.2)$$

$$\delta_{H} = 100 \cdot [H_p(10)_{oj} - H_p(10)_{j\min}] / H_p(10)_{oj} \quad (4.3)$$

$$\delta_{H} = 100 \cdot [H_p(10)_{oj} - H_p(10)_{j\max}] / H_p(10)_{oj} \quad (4.4)$$

4.5.5.9 Verification test results are positive, if no one value of errors in absolute magnitude does exceeded the value given in 1.2.4.

**4.6 Recording of results**

4.6.1 Positive verification test results are recorded according to ПР 50.2.006-94.

4.6.2 In case of negative verification test results, the notification on dosimeter inadequacy is issued or the corresponding record is made in technical documentation, the application of the dosimeter is not permitted.

## 5 ROUTINE REPAIR

5.1 Possible failures of the dosimeter and their troubleshooting are shown by Table 5.1.

Table 5.1- Possible failures of the dosimeter and their troubleshooting

| Failure | Possible cause | Troubleshooting |
|---|---|---|
| The indicator is not activated when the dosimeter is switched on | Accumulator battery discharged | To charge battery |
| Arbitrary signs are indicated when the dosimeter is switching on and than switches off dosimeter power | Accumulator battery failure | To replace battery |
| Charging is absent or instable | Bad contact between contact sets of the dosimeter and charger | To recover the contact |

5.2 The routine repair of УС-05С and КЗУ-27 consists in the recovery of damaged cables and connectors. Inner parts of the dosimeter are not repairable and subjected to the replacement in case of their failure.

## 6 STORAGE

6.1 Before the operation commissioning, the dosimeter, УС-05С and КЗУ-27 should be kept in the heated and ventilated warehouse as follows:

- in the manufacturer package – under the storage condition 1 (L) on ГОСТ 15150-69 at the ambient air temperature of +5 to +40 °C and relative air humidity of up to 80 % at +25 °C;
- without the manufacturer package – under the ambient air temperature of +10 to +35 °C and relative air humidity of 80 % at +25 °C, atmosphere type I on ГОСТ 15150-69.

6.2 Storage time is 3 years.

6.3 The storage room should be free of dust, acid and alkaline vapors, aggressive gases and other corrosion inducing admixtures.

The place of storage should exclude direct sunlight incident on the dosimeter, УС-05С and КЗУ-27.

## 7 TRANSPORTATION

7.1 The manufacturer packed dosimeter, УС-05С and КЗУ-27 can be transported by any carrier and to any distances:

- rail road transportation must be done in covered and clean carriages;
- when transporting by open air motor transportation, boxes must be covered up with waterproof material;
- when transporting by air carrier, boxes must be placed in hermetic heated section;
- when transporting by sea/water carrier, boxes must be placed inside hold.

7.2 Placement and fixing of boxes during transportation must provide stable position and absence of shocks.

7.3 When loading/unloading, requirements given on transportation casings should be kept.

7.4 Transportation conditions:

7.4.1 Margins for external climatic factors for the dosimeter, УС-05С and КЗУ-27 in non-working state (transportation) are as follows:

- temperature …… from minus 50 to +50 °C;
- relative humidity …… up to 98 % at +35 °C.

7.4.2 The dosimeter, УС-05С and КЗУ-27 in transportation package are resistible to impact of sinusoidal vibration of the frequency range of 10 to 500 Hz with 0,35 mm shift amplitude below the crossover frequency, 5,0 g above the crossover frequency (group F3 on ГОСТ 12997-84).

## 8 DECOMISSIONING

8.1 Upon expiration of the entire lifetime of the dosimeter, УС-05С and КЗУ-27, prior to its repair or verification, it is necessary to examine the radioactive contamination of surfaces. The criteria for making a decision about decontamination and further application are provided by 3.11 of ОСПОРБ-99.

8.2 Decontamination should be done applying solutions of surface-active substances, if the radioactive contamination level of dosimeter, УС-05С and КЗУ-27 surfaces (including available for repair) can be decreased below allowed values (table 8.9 of НРБ-99, table 3.11.3, 3.11.4 of ОСПОРБ-99).

8.3 In accordance with pos. 3.7 of СПОРО-2002 the absorbed dose rate near surfaces (0.1 m) is allowed to use as a criterion for further operation of the dosimeter, УС-05С and КЗУ-27 contaminated by unknown gamma-emitting radionuclides.

8.4 In the event that the dose rate is exceeded the background by 0.001 mGr/h (1 μSv/h) after decontamination or the allowed levels of surface radioactive contamination is exceeded, the dosimeter, УС-05С and КЗУ-27 are considered to be the radioactive waste. The radioactive waste is classified in accordance with 3 of СПОРО-2002 and handled (utilized) in accordance with 3.12 of СПОРО-2002.

8.5 The dosimeter, УС-05С and КЗУ-27 allowed to operate after decontamination are subjected to repair, if they are failed. The dosimeter, УС-05С and КЗУ-27 unsuitable for further operation, which level of radioactive contamination does not exceed the allowed value, should be passed to special places of industrial waste disposal.

The dosimeter, УС-05С and КЗУ-27 of expired operation period, which were admitted to operate after decontamination, are subjected to working state examination. If satisfactory working state, the period of further operation is established.

Annex A
(obligatory)

**OVERALL AND CONNECTION DIMENSIONS**

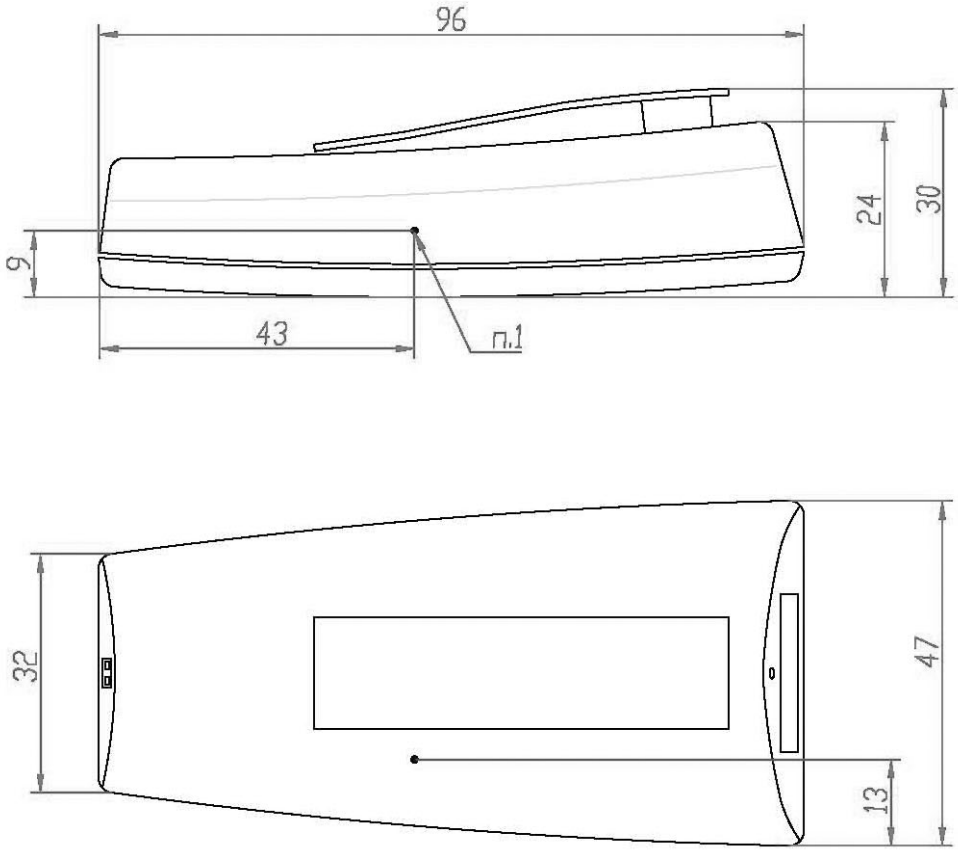


*1. Points note the projection of the detector center*

Figure A.1 - ДКГ-05Д dosimeter

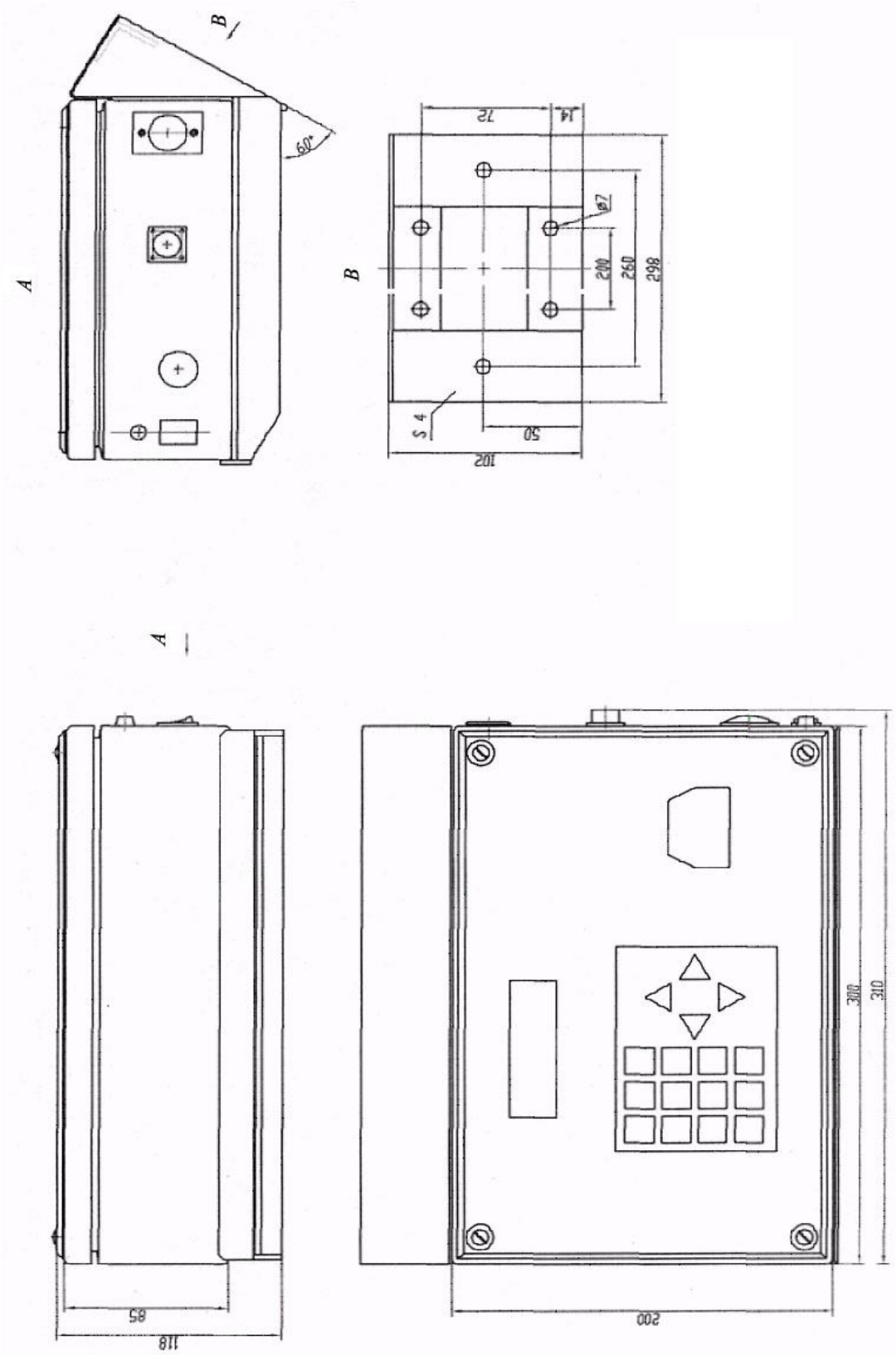


Figure A.2 – Reading device УС-05С

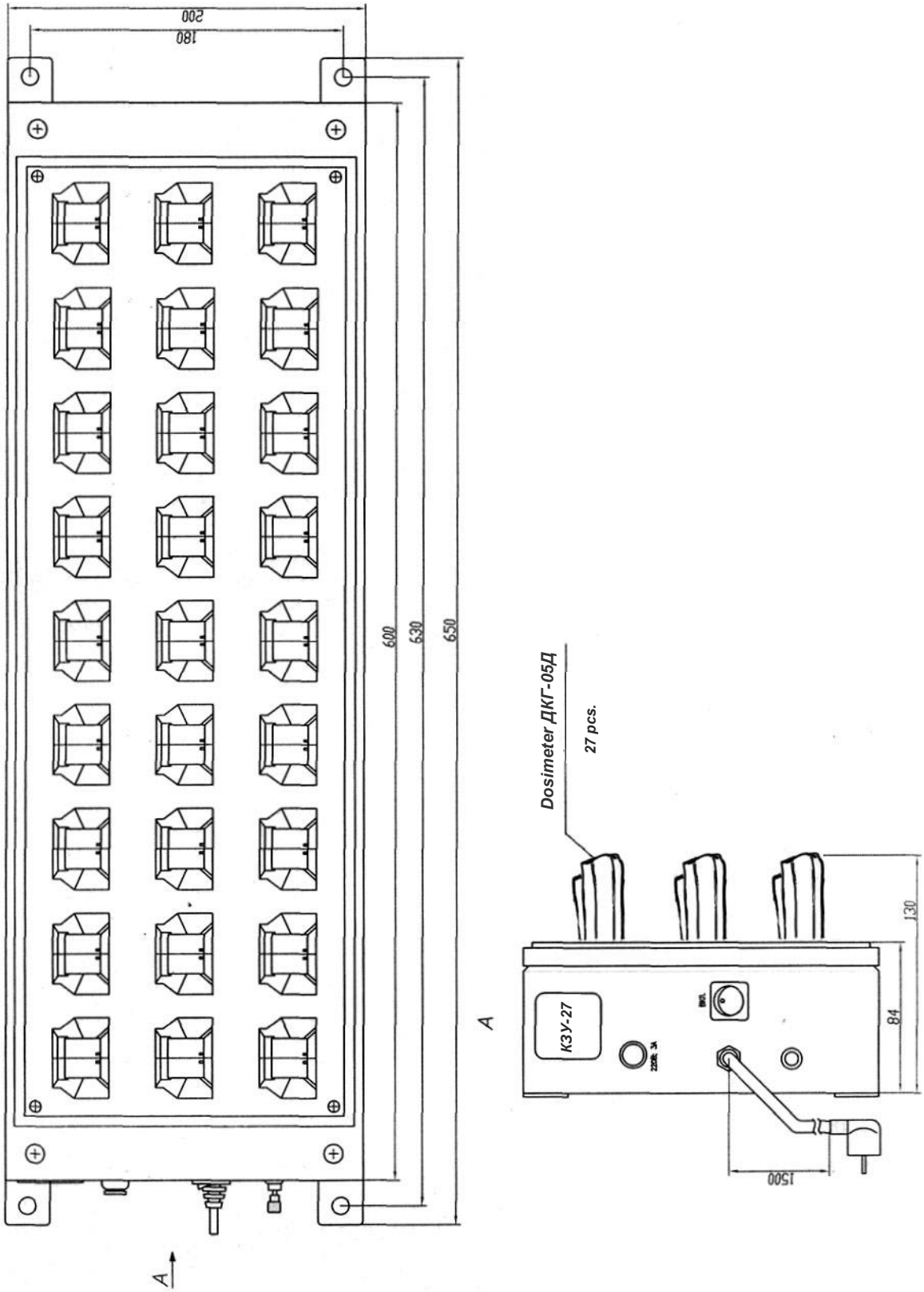


Figure A.3 – Cassette charger КЗУ-27